VOL. 15 NOTES FROM THE SHOP NO. 88

Woodsmith®

Cherry & Maple
SHAKER BENCH

Also:
- PORTABLE WORKBENCH
- THREE-LEG STOOL

No. 88 August, 1993

Woodsmith®

Editor Donald B. Peschke
Managing Editor Douglas L. Hicks
Assistant Editors James M. Dolan, Philip A. Totten, Jonathan Garbison

Creative Director Ted Kralicek
Art Director Rod Stoakes
Senior Illustrator David Kreyling
Illustrators Dirk Ver Steeg, Cinda Shambaugh
Photographer Crayola England
Electronic Graphics Chris Glowacki
Design Director Ken Munkel
Senior Designer Jan Hale Svec
Designer Kent Welsh
Shop Manager Steve Curtis

Circulation Director Liz Bredeson
Subscription Manager Sandy Baum
Circulation Analyst Rod Cain
Newsstand Sales Kent A. Buckton

PUBLISHING SERVICES

Associate Editor: Gordon Gaippe • *Sr. Graphic Artist:* Robert H. Whitmer • *Illustrator:* Mark Higdon

CORPORATE SERVICES

Controller: Paul E. Gray • *Accounting:* Laura Thomas *Bookkeeping:* Julianne Spears • *Information Services Manager:* Joyce Moore • *Electronic Publishing Coordinator:* Doug Lidster • *Administrative Assistants:* Cheryl A. Scott, Julia Fish • *Receptionist:* Jeanne Johnson • *Building Maintenance:* Ken Griffith, Archie Krause

WOODSMITH MAIL ORDER

Marketing Director: Robert Murry • *Art Director:* Cindy Jackson • *Catalog Products Mgr.:* Bob Baker • *Project Supplies:* Linda Jones • *Technical Support:* Jeff Janes • *Systems Operator:* Linda Morrow

CUSTOMER SERVICE

Manager: Valerie Wiese • *Supervisor:* Jennie Enos *Cust. Service Reps:* Jennifer Murphy, Joy Johnson, Sara Kono, Ami Blanshan, Anna Cox, Chris Lo

SHIPPING DEPARTMENT

Supervisor: Jerry Carson • *Fulfillment:* Gloria Sheehan, Donnie McVey, Chuck Carlson, Sylvia Carey

WOODSMITH STORE

Manager: Dave Larson • *Sales Staff:* Wendell Stone, Dominic Bazzocco, Steve Johnson • *Office Manager:* Vicki Edwards

Woodsmith® (ISSN 0164-4114) is published bimonthly (Feb., Apr., June, Aug., Oct., Dec.) by Woodsmith Corp., 2200 Grand, Des Moines, IA 50312.
Woodsmith® is a registered trademark of Woodsmith Corp. Copyright© **1993** Woodsmith Corporation. All rights reserved.
Subscriptions: Single copy: $3.95. One year subscription (6 issues), $19.95. Two years (12 issues), $35.95. (Canada/Foreign add $5 per year, U.S. funds.)
Second Class Postage Paid at Des Moines, IA and at additional offices.
Postmaster: Send change of address to *Woodsmith*, Box 10718, Des Moines, IA 50350.
Subscription Questions? Call 1-800-333-5075, 8:00 am to 5:00 pm, Central Time, weekdays.

PRINTED IN U.S.A.

EDITOR'S COLUMN

Sawdust

While I was building the Shaker Bench for this issue, I decided to sit down and take a break for a cup of coffee. I was alone in the shop, and for a few minutes everything was quiet.

It gave me time to reflect on my progress on the Bench . . . and to think about the shop itself. I began to wonder what a 19th-century Shaker craftsman would think about the *Woodsmith* shop. Screeching routers. A modern table saw. Random orbit disc sanders. And my favorite Japanese dozuki hand saw.

This didn't seem like a place for a 19th-century Shaker.

SHAKER STYLE. The Shakers are known for their simple, yet graceful furniture. And the image this usually brings is of a group of quiet, pious craftsmen working patiently with hand tools.

But the more I learn about the Shakers, the more I wonder whether they would really feel out of place in our "modern" shop.

For a religious movement that only had about six thousand members at its peak in 1850, the Shakers developed an incredible number of inventions.

Sister Tabitha Babbitt is usually given credit for inventing the circular saw blade about 1810. And, in 1828, Brothers Amos Bisby and Henry Bennett designed a tongue-and-groove machine. (They were trying to figure a way to develop a strong joint and speed up production of table tops and floors.)

The list goes on. Mortising machines. A jig saw made from a treadle sewing machine. And even a rather complicated-looking surface planer (with a self-feeding feature on it).

Not only were they inventive, but they borrowed ideas from outside their communities as well. They would adopt and then adapt any machine or device that would make their work more efficient and accurate. So while their furniture was simple, their machinery wasn't.

Back to the *Woodsmith* shop. Yes, I think a 19th-century Shaker probably would be fascinated with all that goes on in our shop. (That is, after he got used to the electrical cords running everywhere — *their* machines were usually powered by an ingenious system of water mills, shafts, pulleys, and belts.)

MAKING SPINDLES. A visiting Shaker might be especially intrigued with the method I used for making the spindles on the Shaker Bench. The Shakers (and most everyone else) would probably make the spindles for this Bench on a lathe.

But the problem I've always had is turning *identical* spindles on the lathe. And in this case, there are 18 of them. All lined up close together like a row of soldiers standing at perfect attention. Any slight differences between the spindles would probably be very noticeable.

How about using a lathe duplicator? That would work (if you have one), but it involves a lot of set-up time. You have to make a template, and then need a way to keep the thin spindles from "whipping" as they're being turned. That requires some kind of a steady rest.

A JIG. So I got to wondering if there was some other way to make the spindles *without* a lathe. What I ended up with was a jig for "turning" identical spindles with a router and electric drill, see page 18.

Each spindle starts out as an ordinary dowel rod that's "chucked" into the drill. Then it's set into the jig (sort of a cradle) and as the dowel is turning, a router is run over the top of it to cut the taper.

I know. It sounds a little strange — but it actually works. Once I got going I was able to turn out perfectly identical tapered spindles in under seven minutes each. (The Shakers would have been impressed.)

The results were so good that I built a slightly larger jig using the same principle to make the "cigar-shaped" legs for the Bench. Then I made three more legs on the same jig and ended up with a little oak stool (see page 16).

HELP WANTED. As we plan for future growth, we're looking for another full-time editor to join our staff here in Des Moines. Candidates should have first-hand knowledge of woodworking and a background in writing and communicating ideas.

If you're interested in this position, write us a letter explaining a little about the woodworking you've been doing lately and your writing experience.

Send your letter to Doug Hicks, Managing Editor, 2200 Grand Avenue, Des Moines, IA 50312. He'll get back to you in a few days.

Don

A LOOK INSIDE

Contents

Tips & Techniques 4 *Seven Great Tips. 1) Pipe Clamp Sawhorse. 2) File Guide. 3) Depth Stops for Router. 4) Stop Collar. 5) Cutting Biscuit Slots. 6) Finger Shield. 7) Bungee Cord Clamp. Plus Two Quick Tips.*

Portable Workbench 6 *A solid top doubles as a sturdy bench vise. And when the top is "unbuckled" from the base, the whole bench can be easily carried to the job site.*

Band Saw Blades 12 *Smooth cuts, tight curves, or fast resawing — there's a blade for every band saw task. Here's what to look for, plus some tips for using different blades.*

Shop Notes 14 *1) Shop-Made Dowels. 2) Fluting Tenons. 3) Custom Sanding Block. 4) Drawing Arcs. 5) Wooden Bench Dogs. 6) Preventing Slip During Glue-Up.*

Three-Leg Stool 16 *The seat for this Stool is actually a number of pieces glued up to look like a solid slab of quarter-sawn oak.*

Routing Spindles 18 *Turning lots of identical spindles on a lathe takes time. We did the same thing quicker — with a router, electric drill, and this simple jig.*

Shaker Bench 22 *A table saw can be used in place of hand tools for rough shaping the seat on this Shaker-style Bench.*

Finishing The Bench 30 *Cherry wood gradually darkens over time. But a similar effect can be achieved in a day with the right stain.*

Sources 31 *Hardware and supplies needed for the projects in this issue.*

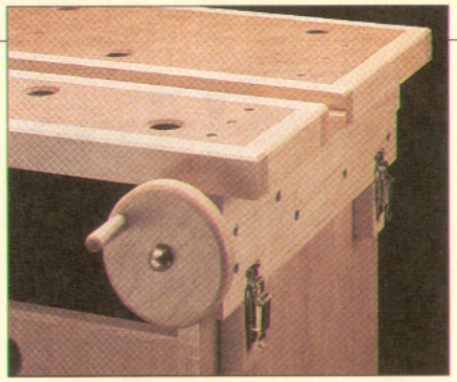

Portable Workbench *page 6*

Three-Leg Stool *page 16*

Routing Spindles *page 18*

Shaker Bench *page 22*

Tips & Techniques

PIPE CLAMP SAWHORSE

■ A pipe clamp can be used for more than clamping. In my shop, a pair of clamps (threaded on both ends) doubles as a sawhorse. (I don't have room in my shop for "boarding" a conventional sawhorse.)

To make the clamps work as a sawhorse, cut one stretcher and two "feet," see Fig. 1. (I used 2x4's.) Then, pipe flanges are used to attach the pipes to the feet. (Flanges are available at hardware stores for around $2.)

Finally, to add stability on an uneven floor, I glued a pair of ¼"-thick "horseshoes" to the bottom of each foot, see Fig. 1.

Peter Williams
Corpus Christi, Texas

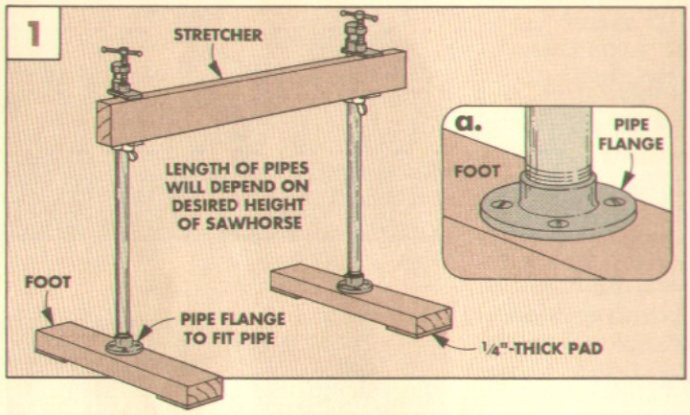

FILE GUIDE

■ A cabinet scraper is sharpened by burnishing (bending over) the edge. But before it can be burnished, the edge must be filed flat and square to the face. It's difficult to do this without rounding over the corner.

To avoid this, I use a file guide made from two pieces of scrap, see Fig. 1.

The scrap pieces have matching grooves that hold the file. When the file is in place, there's a gap between the blocks for the scraper blade. By running the scraper between the blocks, the file will always cut a perfectly flat, square edge, see Fig. 2.

Fred Jones
Rock Island, Illinois

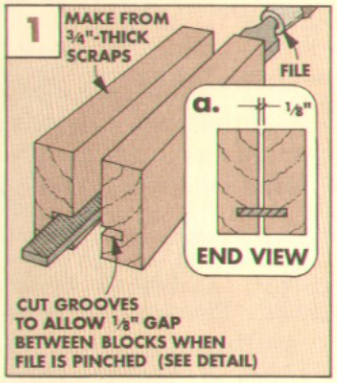

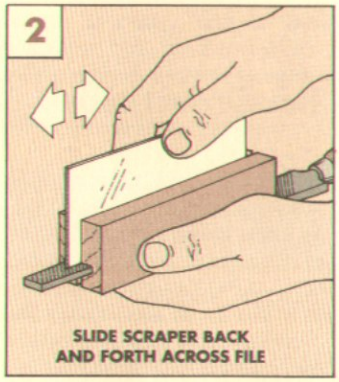

DEPTH STOPS FOR ROUTER

■ When routing a single dado, I sneak up on the final depth by lowering the bit between passes. But when routing a series of dadoes to the same depth, I do something a little different.

Instead of changing the depth of cut and completing one dado and then moving on to the next dado, I make a shallow cut in each. Then I proceed to cut a slightly deeper cut in each. And then continue this process until they are all cut to final depth.

The easiest way to do this is to add a set of auxiliary base plates to the bottom of the router, see Fig. 2. Note: Two of the plates are ⅛" Masonite, the third is 1/16" plastic laminate (Formica).

To start out, adjust the height of the bit to the finished depth of the dado, see Fig. 1. (Once the bit is set, leave it alone.) Then carpet tape the auxiliary plates to the base of the router, see Fig. 2.

Now remove one plate at a time to lower the bit, see Fig. 3. The final pass will be a 1/16"-deep skim cut that leaves a clean dado at the correct depth.

David A. Cole
Goodlettsville, Tennessee

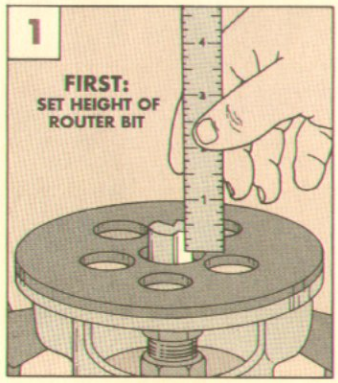

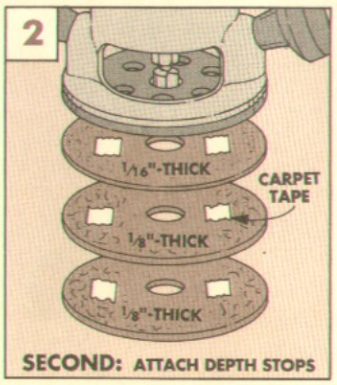

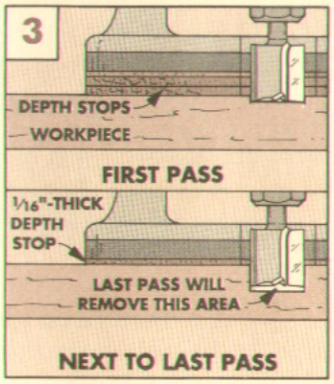

STOP COLLAR TIP

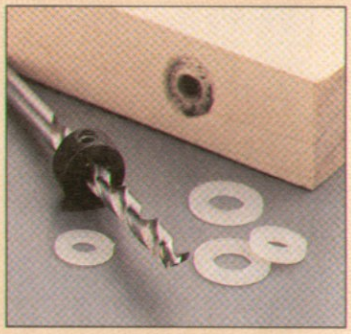

Steel drill bit stop collars prevent a bit from going too deep. But they can mark or burn the surface of the workpiece. To prevent this, I place a nylon washer under the stop collar.

Nylon washers can be purchased in a variety of sizes. Or you can cut your own from a plastic coffee can lid. Note: When setting the stop, remember to include the thickness of the washer.

Dan Armstrong
Martinez, Georgia

CUTTING BISCUIT SLOTS

■ On a recent project, I used biscuits to join shelves to the sides of a cabinet. Normally the short slots for the biscuits are cut with a plate joiner, see Fig. 1. Laying out and cutting the locations of the slots on the ends of a shelf is straightforward. But setting up a guide fence for the plate joiner to cut the slots on the inside face of the cabinet sides can require a lot of measuring.

So instead of using the plate joiner to cut short slots in the sides, I used the table saw and cut a stopped dado for the biscuits, see Fig. 2.

To do this, first mark the location of the center of each shelf on the sides of the cabinet. Then cut a dado *centered* on the layout line to accept the biscuits, see Fig. 2. After the slots and dadoes are cut, the biscuits are glued in the shelf slots, then the biscuits are glued into the dadoes.

Dennis Amy
Burlington, Ontario

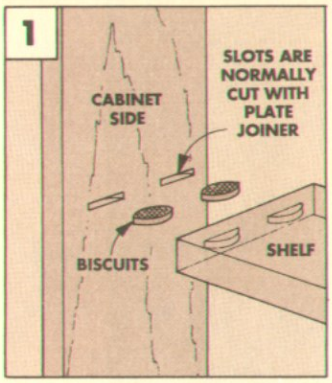

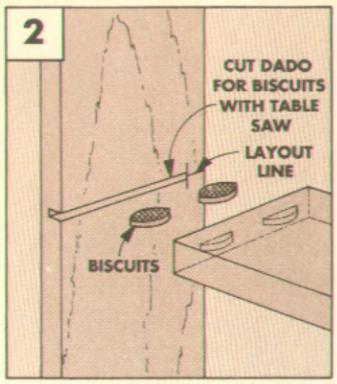

FINGER SHIELD

■ When using my router table, I like to keep my fingers away from the bit. So for routing small pieces, I made a safety shield that grabs the workpiece and shields my fingers from the bit.

The shield is made from a piece of ¼"-thick Plexiglas with a pair of 1"-dia. dowel handles, see Fig. 1. A smaller piece of Plexiglas attached to the first is optional — it provides clearance for the nut or screw that holds the bearing on the bit when routing thin workpieces, or when taking a deep cut, see Fig. 1a.

I use double-sided carpet tape to hold the workpiece firmly on the bottom of the shield.

Peter Gibeau
West Bend, Wisconsin

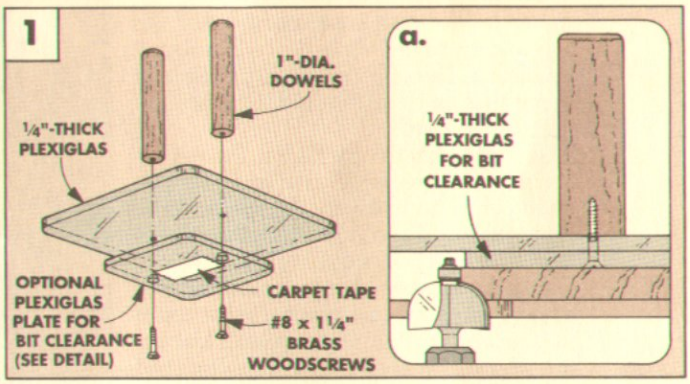

BUNGEE CORD CLAMP

■ Clamping across two edges that aren't parallel is just about impossible to do with ordinary clamps. I recently faced this challenge when attaching edging strips around a table top shaped like a boat, see Fig. 1.

To do this, first I clamped a pipe clamp across both sides of the workpiece. Then I hooked bungee cords around the clamps and stretched them around to hold the edging strips in place.

Charlie Beach
Marthasville, Missouri

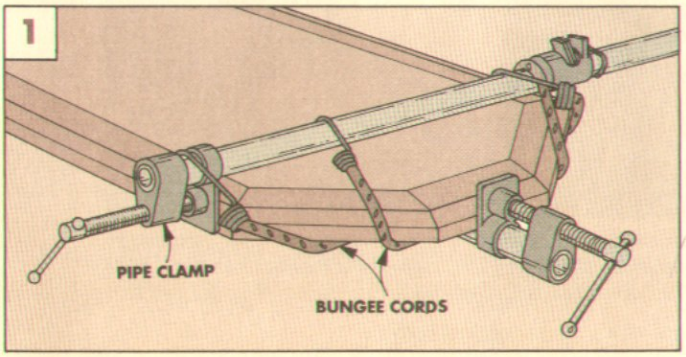

QUICK TIPS

SEATING T-NUTS

■ Driving a T-nut into a hole with a hammer can result in the workpiece splitting or the T-nut going in crooked. To prevent this, I install T-nuts with a vise.

Just place the T-nut in the hole and then position the workpiece between the jaws of the vise. As the vise is slowly tightened, the T-nut is seated in the hole.

Michael B. Thoma
Upland, California

SCRAPING GLUE

■ Scraping dried glue from a glued-up panel is work. Especially if the glue is completely dry. So to make it easier to scrape away the glue, I soften the glue by rubbing it briskly with a block of wood.

The heat generated by the friction softens the glue, making it easier to scrape away.

Richard A. Parry
Quakertown, Pennsylvania

WE BUY TIPS

If you have an original tip and would like to share it with other woodworkers, just send it to *Woodsmith*, Tips and Techniques, 2200 Grand Ave., Des Moines, Iowa 50312.

We will pay (upon publication) $25 to $100, depending on the published length of the tip. Please include an explanation, a photo or sketch, *plus* a daytime telephone number in case we have some questions.

Portable Workbench

This bench is designed to be light enough to carry around, yet strong enough to provide a stable work surface.

Years ago, when I first saw a portable bench like this one, I was impressed. And intrigued. Could I design and build one out of wood — without using a lot of steel or aluminum? I finally decided to give it a try.

There were a number of requirements for this workbench. It had to be strong and stable. But still easy to fold up and carry around. And the top had to open and close like a vise without requiring a lot of special hardware.

BASE DESIGN. The first design challenge was the base. Manufactured benches have metal bases that look like they were designed to hold up a lunar module. And the legs fold up, so the whole bench can be carried around like a suitcase. It didn't take long to see this leg system would be difficult to build out of wood.

So I tried something different. I started by making a strong, wide base from ¾" plywood. Then, to make the bench easier to carry, the top lifts off, and the legs fold in flat against a stretcher, see photo below.

VISE MECHANISM. Another design challenge was the vise mechanism in the top of the bench. For the vise screw, I knew a threaded rod would work the best. But I had to figure out how to get the rod and the top to work together.

Wooden runners and guides were the answer. They slide in and out like extension glides for a drawer. And the runners and guides give the top solid support.

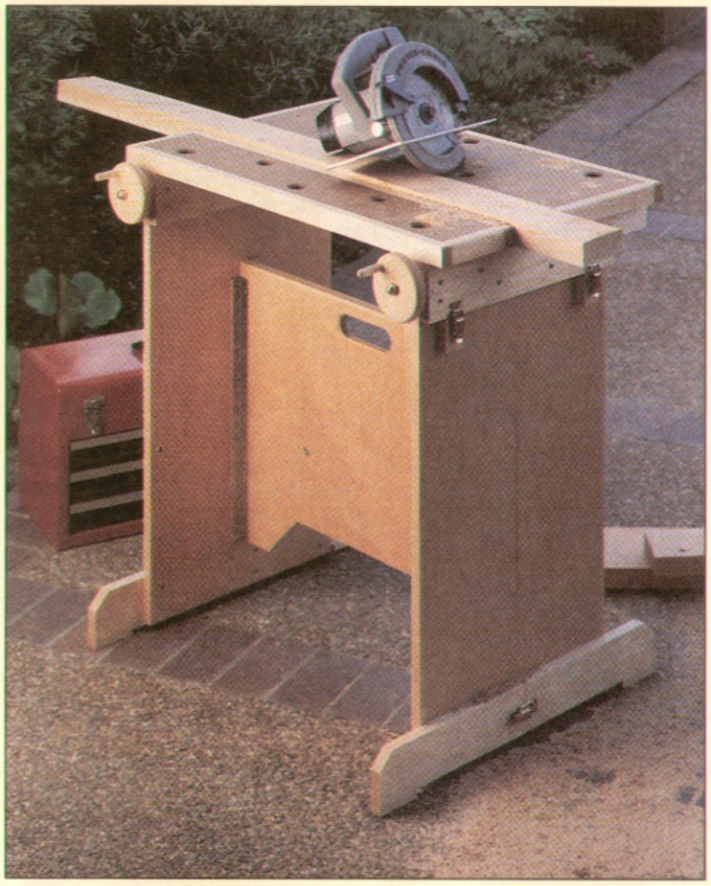

To store or move the workbench, just release the draw catches. Then, lift off the top and fold in the legs.

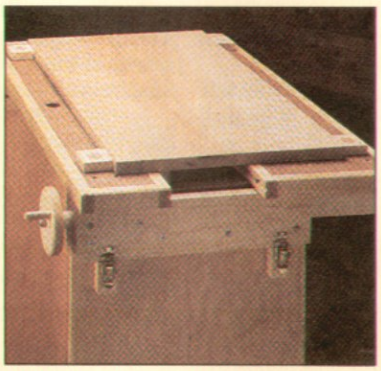

With bench dogs, the clamping capacity of the top is increased from 7" to 17". Big enough for a small panel.

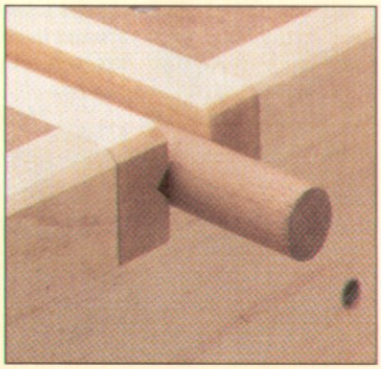

The inside of each vise face has a V-groove to allow the bench to hold round or irregular-shaped objects.

EXPLODED VIEW

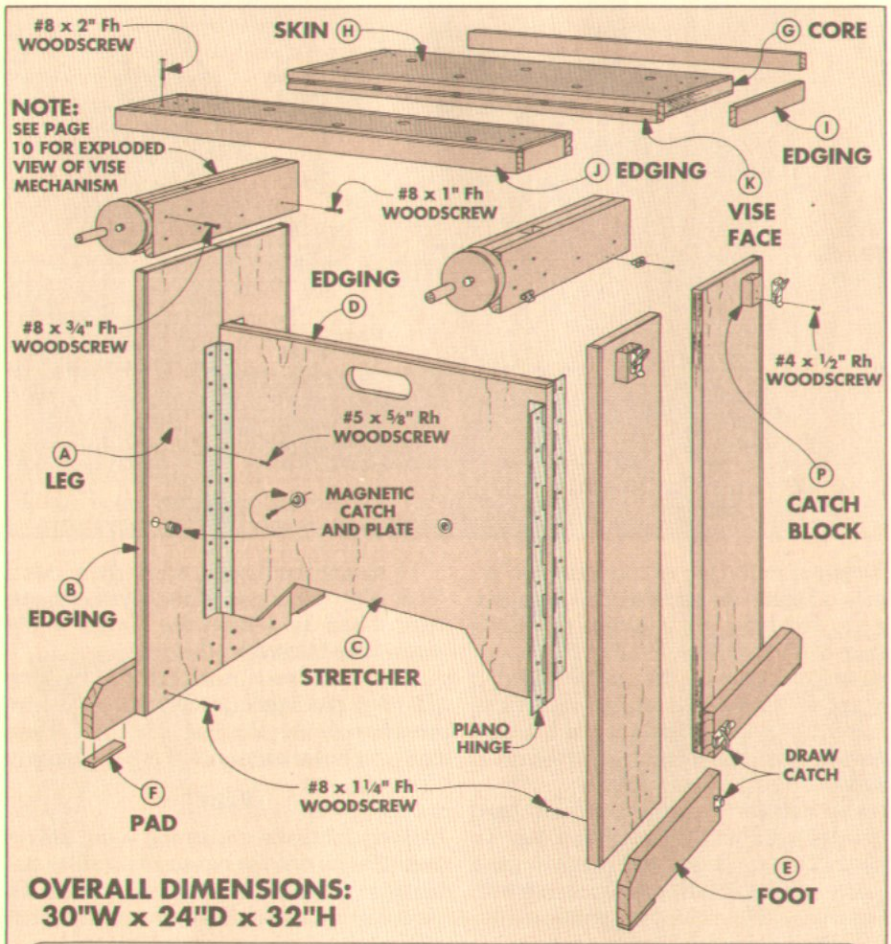

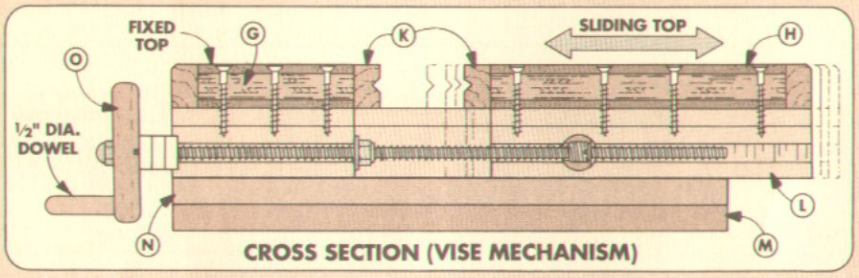

MATERIALS

BASE		
A	Legs (4)	3/4 ply x 7 3/4 - 27 1/2
B	Edging (4)	3/4 x 1/4 - 27 1/2
C	Stretcher (1)	3/4 ply x 25 - 18 3/4
D	Edging (1)	3/4 x 1/4 - 25
E	Feet (4)	3/4 x 3 - 12
F	Pads (4)	3/4 x 1/2 - 3
TOP		
G	Core (1)	3/4 ply x 14 - 28 1/2
H	Skins (2) *	1/4 x 14 1/4 - 28 3/4 rgh.
I	Edging – Short (2)	3/4 x 1 1/4 - 15 rgh.
J	Edging – Long (2)	3/4 x 1 1/4 - 30 1/4 rgh.
K	Vise Faces (2)	3/4 x 1 1/4 - 30 1/4 rgh.
VISE		
L	Runners (4)	3/4 x 2 - 17 3/4 rgh.
M	Guides (4)	3/4 x 3 1/2 - 16
N	Spacers (2)	3/4 x 1 1/2 - 16
O	Handwheels (1)	3/4 x 4 - 10 rgh.
P	Catch Blocks (4)	3/4 x 1 1/4 - 2

*Cut from Tempered Masonite

SUPPLIES

BASE & TOP

- (4) 1 1/2" x 18" Piano Hinges w/Screws
- (4) Mag. Catches w/Strikes and Screws
- (6) Draw Catches w/Screws
- (26) #8 x 1 1/4" Fh Woodscrews
- (14) #8 x 2" Fh Woodscrews

VISE

- (1) 1"-Dia. Dowel 36" long
- (2) 1/2"-Dia. Dowel 2 3/4" long
- (2) 3/8"-16 x 17 7/8" Threaded Rods
- (2) 3/8"-16 Cap Nuts
- (2) 3/8" Flat Washers
- (2) 3/8"-16 Lock Nuts w/Nylon Inserts
- (6) 3/8" I.D. x 1" O.D. Nylon Spacers
- (2) 3/8"-16 Threaded Inserts
- (2) 6d Common Nails
- (8) #8 x 3/4" Fh Woodscrews
- (16) #8 x 1" Fh Woodscrews

CUTTING DIAGRAM

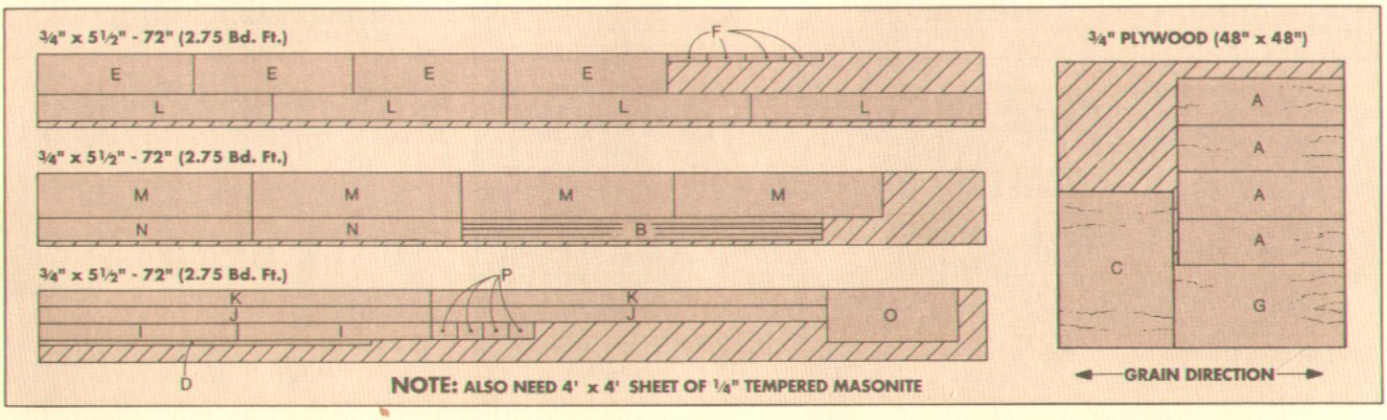

BASE

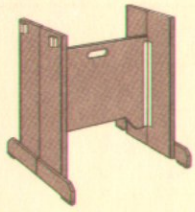

The base on this portable workbench has to be strong and stable. Otherwise, you're not going to work on it. I designed the stretcher and the legs wide enough to support a lot of weight and stand up to the heavy blows of a hammer.

LEGS

The four **legs (A)** are cut to size first, see Fig. 1. (I used ¾-thick birch plywood.) Then to prevent the edges of the plywood from splintering, I added **edging (B)** to the outsides.

Note: Hardwood plywood is usually a little *less* than ¾" thick. But I still used ¾"-thick birch for all the edging pieces. This way the edging could be planed flush with the plywood *after* it was glued on.

Shop Tip: To trim the edging flush without digging into the plywood, run a strip of masking tape beside the edging, see Fig. 1a. The tape protects the plywood and lets you know when to stop planing.

When the workbench is complete, the top of the bench rests right on the legs. So to make the top section easier to set in place, I routed a chamfer along the top edge of each leg, see Fig. 1b.

STRETCHER

When the legs are complete, cut the **stretcher (C)** to size, see Fig. 2. I also added **edging (D)** to the top of the stretcher.

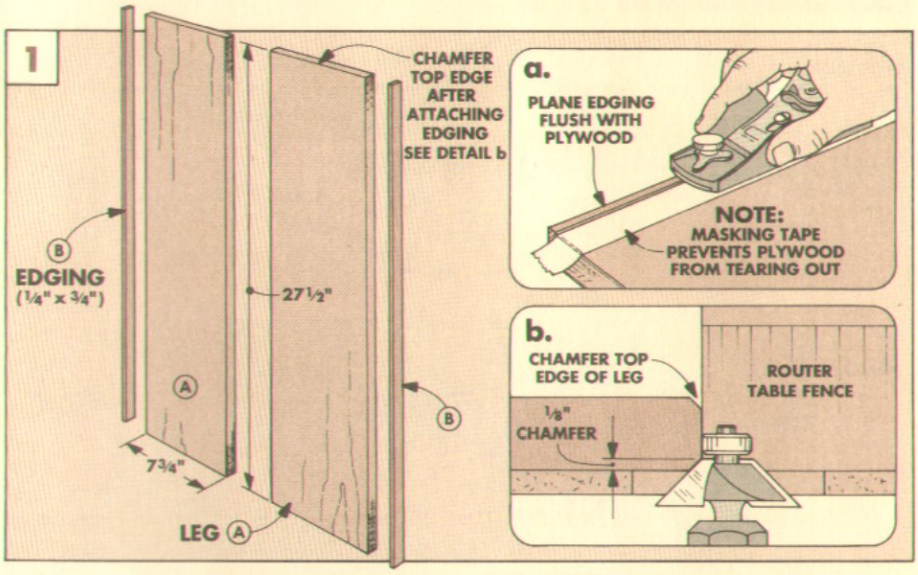

A cut-out in the top of the stretcher becomes a handle for carrying the base, see Fig. 2a. And I also cut a section out of the bottom of the stretcher, see Fig. 2b.

Shop Note: To make the handle easier on the hands, I softened the edges with a chamfer bit in the router. Why not use a roundover? I've found rounding over the edges of plywood tends to create splinters.

PIANO HINGES. A sturdy base wasn't hard to design, but it had to be portable too. To allow the base to fold flat (see photo on page 6), each leg is attached to the stretcher with a piano hinge. This solved the problem without sacrificing rigidity.

To mount the hinges, screw them down flush with the edges of the stretcher, see Figs. 3 and 3a. (Offset the hinges so the screws don't hit each other.)

ASSEMBLY. Now assemble the base by clamping two legs together, and center the stretcher on the joint line, see Fig. 4. Then drill pilot holes and screw down the hinges.

FEET

At this point the base is strong — but adding **feet (E)** extends the base and provides stability, see Figs. 5 and 6. (Design Note: To remove the sharp point from each foot, I cut off the top outside corner at 45°.)

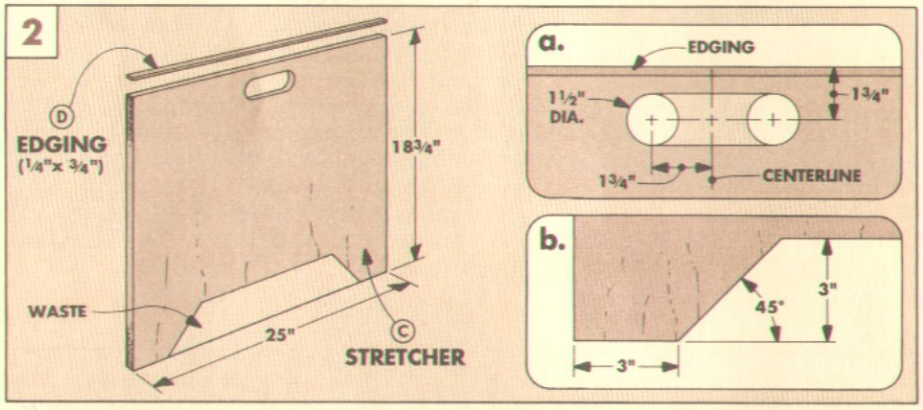

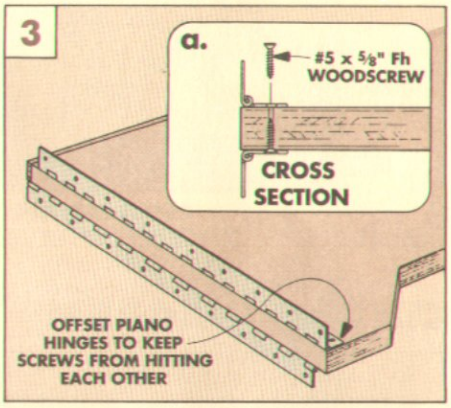

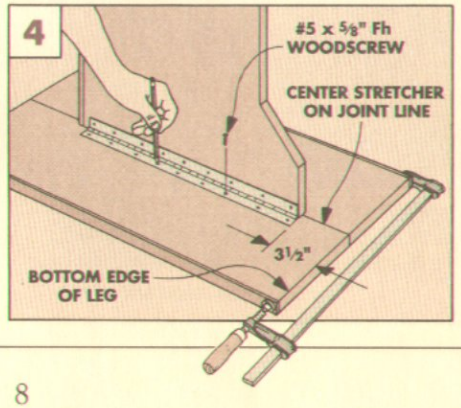

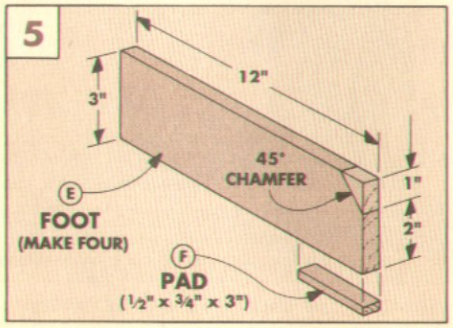

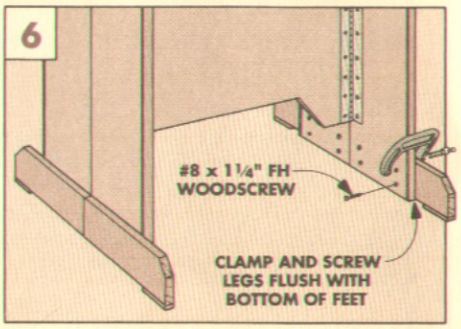

Next, **pads (F)** can be glued on the feet, see Fig. 5. These pads lift the base off the ground and allow the bench to sit squarely on an irregular floor.

To attach the feet, just glue and screw them from the inside, see Fig. 6. But make sure the legs are flush with the bottom of the feet — not the bottom of the pads.

MAGNETIC CATCHES. There's one final problem with the base. The legs will swing open and shut as you carry it around. To prevent this, I mounted magnetic catches to the insides of the legs, see Fig. 7.

First, drill a 9/16" hole and glue in the magnetic catch. Then, stick the strike plate on the magnet and press the leg against the stretcher, see Fig. 7a. This will leave a tiny mark for locating the strike plate.

Note: Sometimes it's easier when clamping a panel vertically to set it on dogs. If you want to do this, you'll need to drill some holes in the stretcher, see box at right.

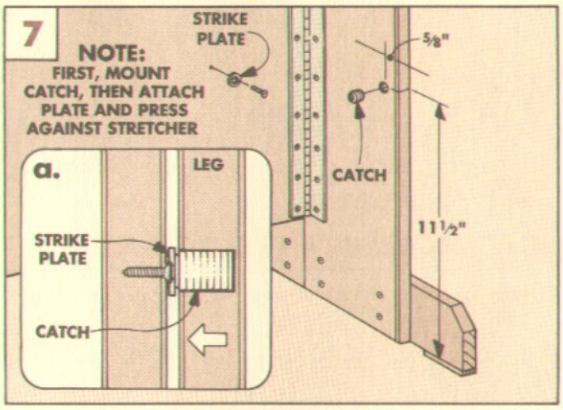

VERTICAL DOGS

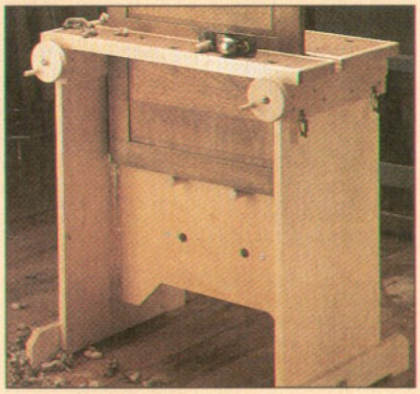

To make it easier to hold vertical panels, holes can be drilled in the stretcher. Then, insert the bench dogs (used on the top), and set the panel on them.

TOP

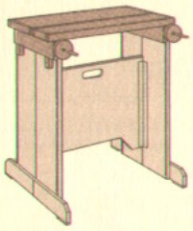

The top of this workbench isn't a single slab like on a typical bench. It's really two pieces — one fixed and one movable. So the top opens and closes like a vise.

TOP. Three layers of material make the top of this bench strong. I sandwiched a core panel of plywood between two pieces of Masonite. I began as if the top were one piece, then cut it in two after adding edging strips.

First, cut the **core (G)** to finished size, see Fig. 8. Then cut both 1/4"-thick **skins (H)** of Masonite a little *oversize*. (Note: I used tempered Masonite for more durability. Standard Masonite is not as strong. It tends to flake apart with use.)

After gluing up the layers, trim the edges with a flush trim bit in the router, see Fig. 8a.

EDGING. Next, add **edging (I)** along the ends, see Fig. 8. Then, after cutting the ends flush, add **edging (J)** to the front and back.

VISE FACES. After the edging is attached, the top is cut into two pieces, see Fig. 9. Then two **vise faces (K)** are added to the inside edges. These are really just two more strips of edging. But I made them a little different.

First, I wanted to be able to replace the faces if they got banged up. So they're screwed in instead of glued, see Fig. 9a. But before screwing them in, cut a v-groove on each vise face so they can grip round objects, see photo on page 6.

Finally, to complete the top sections, I drilled a series of holes for bench dogs, see Fig. 10. This increases the clamping capacity of the vise from 7" to 17". (To make the dogs, refer to page 15.)

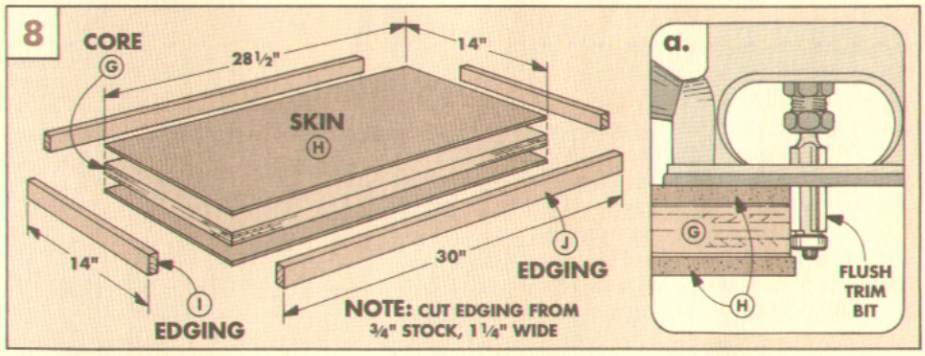

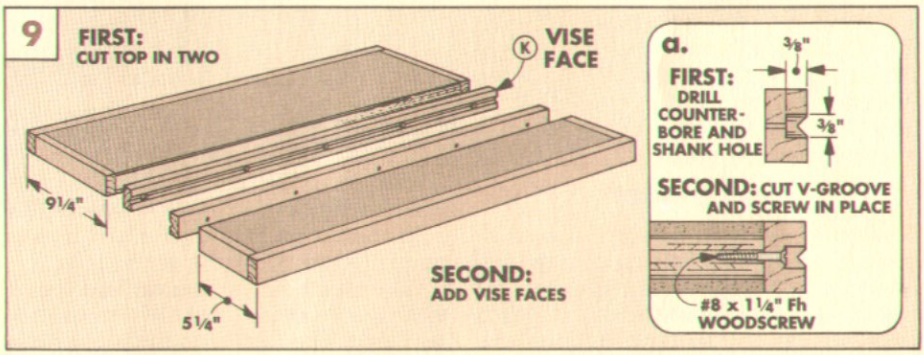

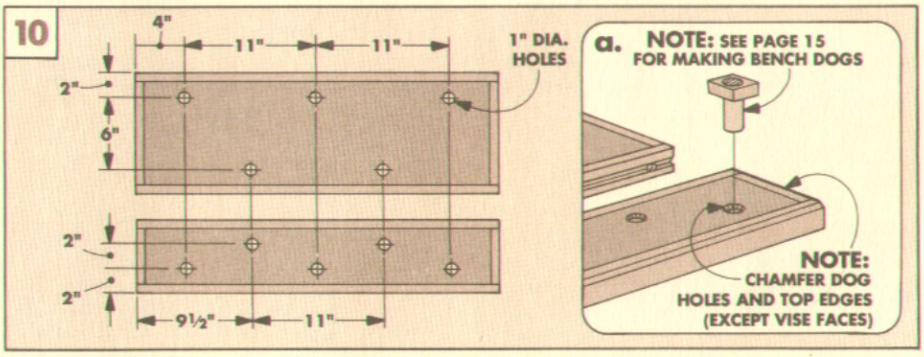

VISE MECHANISM

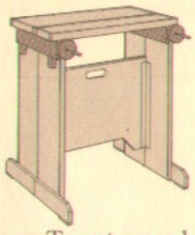

The top is screwed to a pair of vise mechanisms. Each vise has a threaded rod that "drives" a sliding runner in and out of a guide unit, refer to Fig. 24 on the next page. To get a good fit, I built the vise from the inside out, starting with the runners.

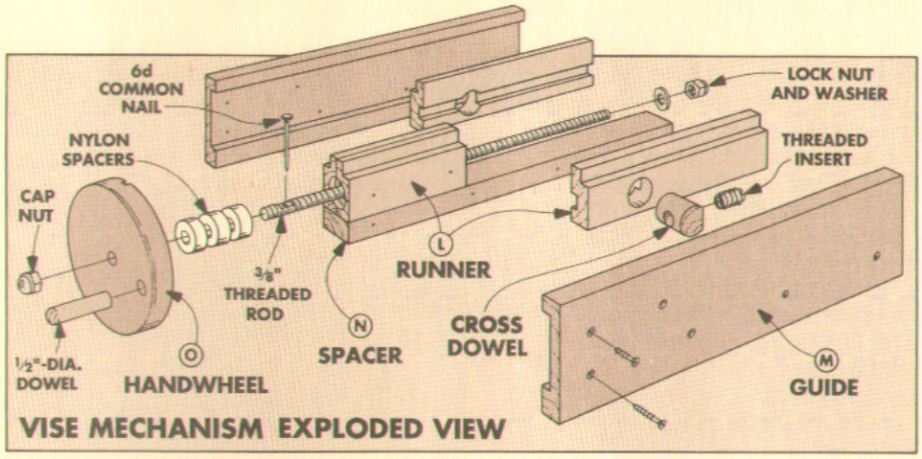

VISE MECHANISM EXPLODED VIEW

RUNNERS

Begin by ripping four halves for the **runners (L)** to width, see Fig. 11. Then rip a 1/2"-wide groove on one face of each, see Fig. 11a. (This is for the threaded rod to run through.) Next, glue the halves together with the grooves facing each other, see Fig. 12.

Shop Note: To align the grooves, I used square plugs. Once the runners are clamped together, remove the plugs. But don't throw them away. (You'll use them later.)

TONGUE. The top of the workbench is screwed to a tongue on the top of each runner. To create this tongue, cut a rabbet on each face of the runner blank, see Fig. 13.

Now, cut each runner blank into two lengths, see Fig. 14. These pieces should match the widths of the two top sections.

FRONT RUNNERS. The runners need a few modifications before assembly. To seat some nylon spacers at the front end (refer to Fig. 20), the short, front runners need a shallow hole drilled in them, see Fig. 14a.

Shop Note: To guide the centerpoint of the drill bit, use the same plugs that kept the runners aligned. Plug the holes and mark an "X" to indicate the centers.

SLIDING RUNNER. Now, the *longer* (back) runners need to be trimmed to slide easily in the guides. This is done by re-cutting the rabbets that created the tongues, see Fig. 13. Simply set the dado blade so the rabbet is 1/16" wider and 1/32" deeper.

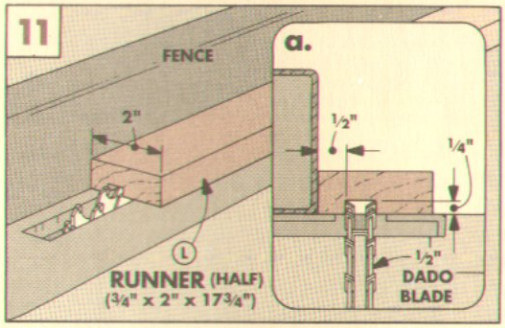

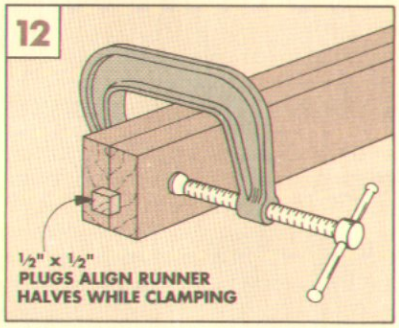

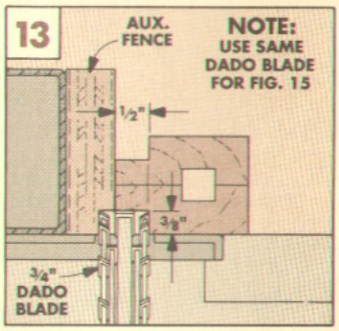

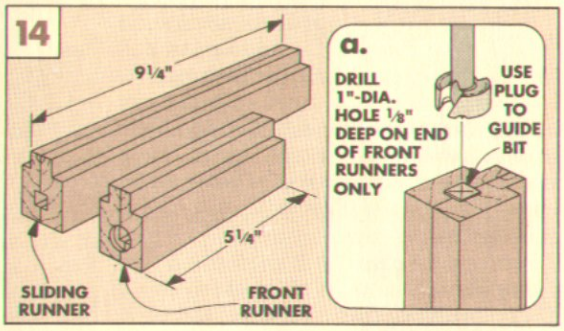

GUIDE UNITS

A pair of guides sandwich each runner, allowing the runners to "telescope" in and out. After cutting four halves for the **guides (M)** to size, rip a groove down the length of each piece, see Fig. 15. The depth of this groove should match the depth of the *original* rabbets in the runner blanks (3/8").

SPACERS. Unlike the runners, the guide halves aren't glued together — **spacer (N)** holds them apart. This way, the back runner can slide in the guide unit, see Fig. 16a.

Cut each spacer blank to match the *length* of the guides and the *width* of the runners, see Fig. 16. Then to determine the *thickness* of the spacers, dry assemble the guides around the *front* runners, see Fig. 16a.

When the spacers fit between the runners and the guides, screw the guides and spacers together, see Fig. 17.

VISE MECHANISM

To drive the sliding runners in and out, a pair of handwheels turn threaded rods.

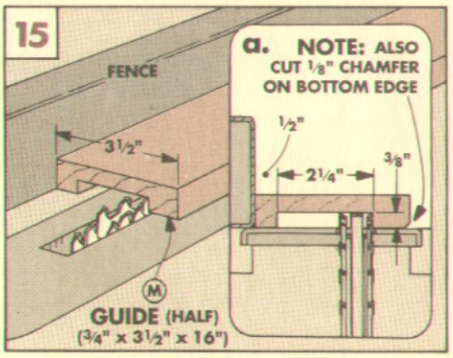

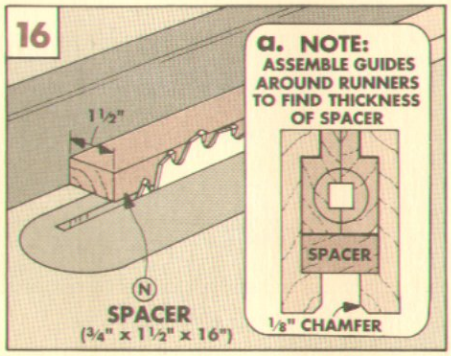

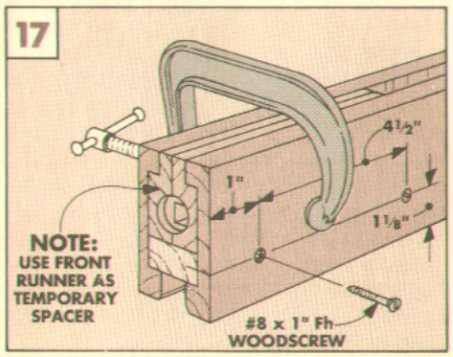

HANDWHEELS. The handwheels start out as square blanks with two holes drilled in each — one hole for a handle and one for the rod, see Fig. 18. Next, cut a shallow kerf across each blank for a cross pin. (The cross pin locks the handwheel on the rod.)

Now, the **handwheels (O)** can be cut round and the edges softened. For handles, glue a dowel in each handwheel, see Fig. 18.

THREADED ROD. Next, the rods can be cut to size, see Fig. 19. Shop Tip: Before cutting the rod, thread a nut beyond the intended cut line. Removing the nut after the rod is cut will repair any damaged threads.

With the rod cut to size, drill a hole in it for the cross pin (6d common nail), see Fig. 19. To help the bit get started, I filed a flat spot near the end of the threaded rod.

HANDWHEEL ASSEMBLY. Attaching each handwheel is a three-step process. First, the handwheel is locked on the end of each rod with a cap nut and the cross pin, see Fig. 19. Next, slip three nylon spacers and the front runner on the rod, and secure them with a washer and lock nut, see Fig. 20. Finally, the front runner can be screwed inside the front end of the guide unit, see Fig. 21.

SLIDING RUNNER ASSEMBLY. Finally, it's time to install the sliding runner, see Fig. 24. But the sliding runner won't work until it's connected to the threaded rod. To connect them, I added a cross dowel with a threaded insert, see Fig. 24a. As the rod turns, this dowel drives the runner in and out.

To do this, I drilled a hole through the runner, see Fig. 22. Then I mounted a threaded insert into a dowel, see Fig. 23.

Shop Note: If you file or cut a flat surface on the dowel, then you'll reduce the amount of tear out when installing the insert.

After the dowel is cut, set it in the hole (flat side facing back), see Fig. 24. Then slide the runner in, turning the handwheel until the rod engages the insert. (Joint or sand the sides of the runner if it fits too tight.)

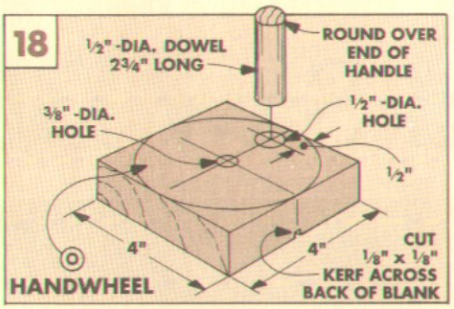

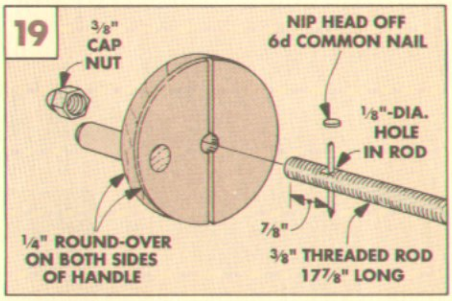

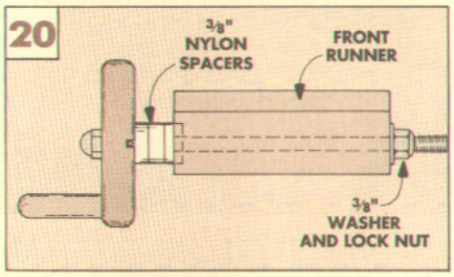

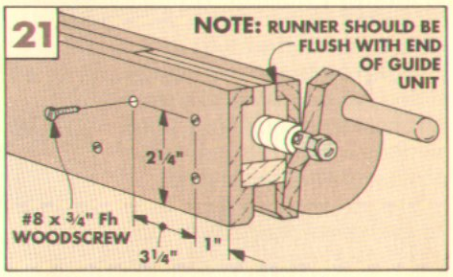

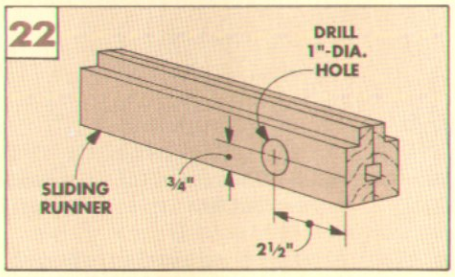

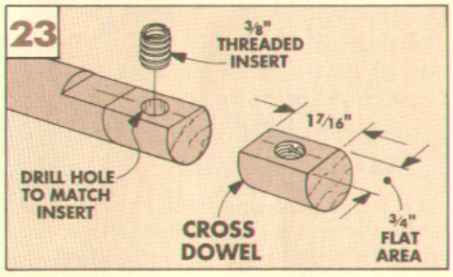

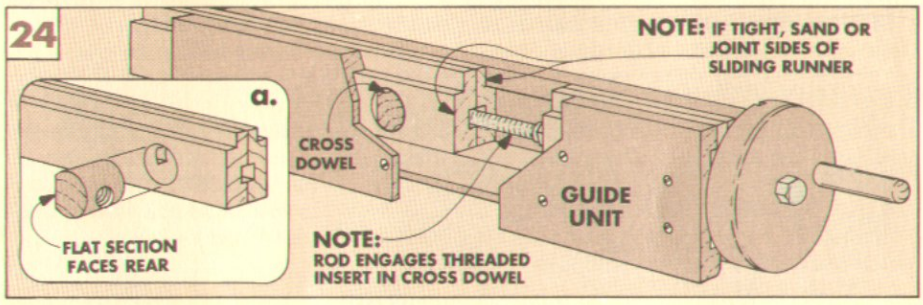

FINAL ASSEMBLY

Now it's time to put the bench together. First, the vise assemblies are locked to the base with draw catches, see Fig. 25. (To do this, **catch blocks (P)** must be mounted first.) Then, catches are mounted across the feet to lock the legs in the open position.

Next, the tops of the workbench are screwed into the *runners* of the vise assemblies, see Fig. 26. The front section of the top should be flush with the fronts of the vise assemblies. And the back section should be flush with the backs. Note: The movable runner should also be screwed flush with the back edge of the top, see Fig. 26.

To complete the bench, give it a thorough sanding. Finally, I protected my bench with a couple coats of polyurethane.

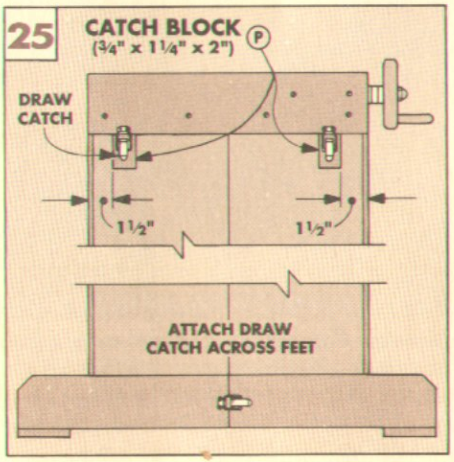

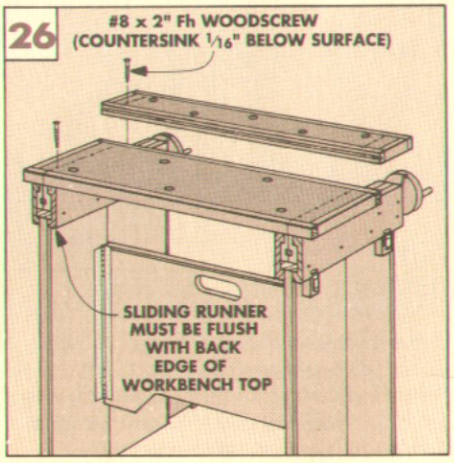

Band Saw Blades

I first realized how versatile the band saw is when I saw one being used in a butcher shop. But whether it's cutting meat, wood, or metal, it is basically the same tool — the real difference is in the blade.

Band saw blades look simple. A thin band of metal with teeth. But browse through any woodworking catalog. The number of choices can be intimidating.

It would be nice if there was a "combination" blade for a band saw just as there is for a table saw. Unfortunately, no band saw blade can do everything well.

But choosing the right blade doesn't have to be a guessing game. You just have to know which questions to ask.

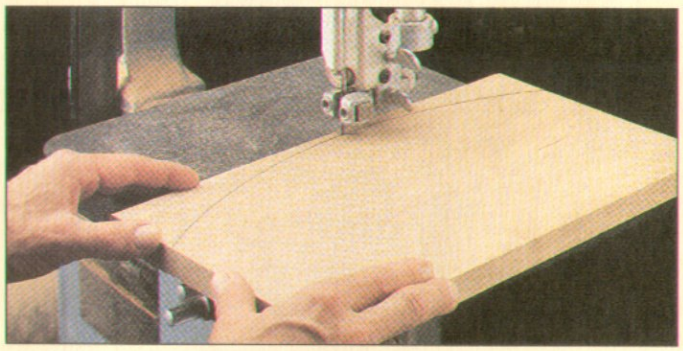

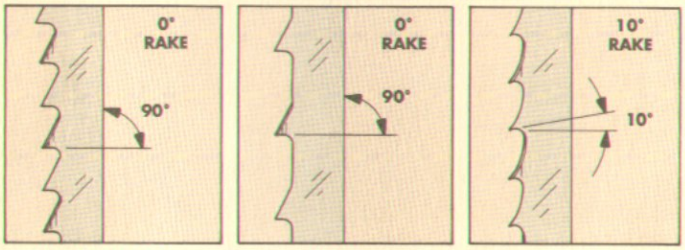

STANDARD SKIP HOOK

BLADE SELECTION

To select a band saw blade, the first question I ask is how tight a curve I'll cut. The narrower the blade, the smaller the circle it will cut.

BLADE WIDTH. So why not leave a narrow blade on your band saw all the time? It may cut circles well. But when resawing or cutting a straight line in thick stock, a narrow blade can bend or flex under pressure. The result is either a wavy cut or one that's not square but "barrel-shaped."

A narrow blade also heats up faster than a wide blade. If it gets too hot, the teeth will soften and dull, ruining the blade.

SMOOTH OR FAST CUT? The next question I ask when selecting a band saw blade is whether I want to cut quickly or end up with a smooth cut. There are two things that affect how a blade cuts. The pitch of the tooth and the tooth pattern.

PITCH. Tooth pitch can throw you — it's not the angle or the slope of the teeth. It's the number of teeth per inch (tpi). The more teeth a blade has, the smoother the cut. (Each tooth is cutting smaller shavings off the wood.) But because the shavings are smaller, you have to cut much slower. Otherwise the blade will get too hot.

TOOTH PATTERNS

There are a lot of different tooth patterns for band saw blades, but the three most common are standard (or raker), skip tooth, and hook tooth blades, see the examples at left and drawings below. Each one is used for making a different type of cut. The difference between them is the cutting angle of the teeth (the rake), and the amount of space between the teeth (the gullet).

STANDARD BLADE. Standard tooth blades are usually narrower (1/16" to 1/4"-wide) and have the most teeth per inch. They're evenly spaced so the teeth and gullets are the same size.

The cutting angle on the standard blade is 0°. This means the teeth are 90° to the back of the blade, so they don't really cut the wood — they actually scrape it instead. This allows the smoothest cut of the three patterns, but you have to feed the workpiece slow and steady into a standard tooth blade.

SKIP TOOTH BLADE. The skip tooth blade has a 0° cutting angle just like the standard blade. But the skip tooth blade only has half the number of teeth as the same size standard blade (it's missing every other tooth). This increases the size of the gullets so the skip tooth can cut a little faster than the standard blade. Of course, the end result is not quite as smooth.

HOOK TOOTH BLADE. The teeth on the hook tooth point down a little (usually at 5-10°). So they cut the wood — not just scrape it. And because it cuts more aggressively and needs to hold more sawdust, the hook tooth blade also has larger rounded gullets.

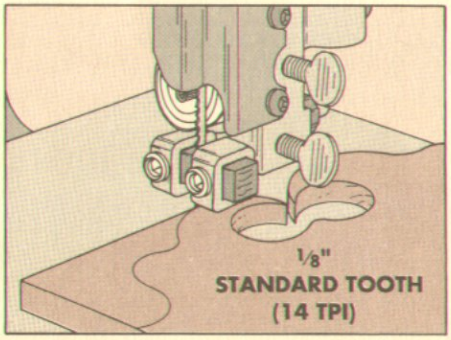

Scroll-type Cuts: *For tight circles, I use a 1/8" standard blade with 14 tpi. It can cut a circle with a 1/8" radius, and it leaves a nice, smooth surface. But narrow blades need more support, refer to next page.*

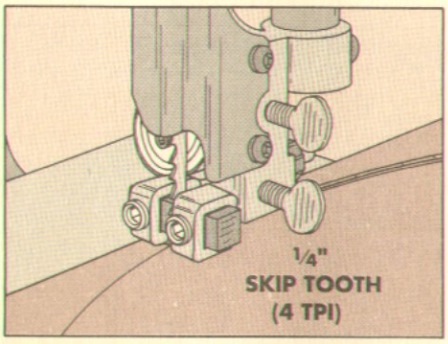

Gentle Curves: *I cut gentle curves wide and sand to the line, so a smooth finish isn't needed. A 1/4"-wide skip tooth blade with 4 tpi works well. The small number of teeth and wide gullets lets me cut quickly.*

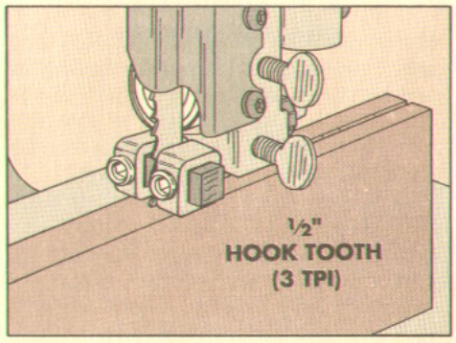

Resawing: *Resawing wood into thin stock creates a lot of resistance. A 1/2"-wide blade won't flex or bend easily. And a hook tooth pattern with 3 teeth per inch (tpi) will clear out the waste quickly.*

NARROW BLADES

Band saw blades keep getting narrower (1/16" and 1/8"-wide blades are now available). You can use them to cut very tight circles — just like a scroll saw. But because they're so narrow, they require more support.

THRUST BEARINGS. Thrust bearings keep the blade from being pushed off the wheels of the band saw. Usually, I set them 1/64" *behind* the blade. But with narrow blades, I set the thrust bearings so they're touching the blade or even pushing it forward 1/64".

GUIDE BLOCKS. Using metal guide blocks is also a problem with narrow blades. They're supposed to support the sides of the blade, but if they contact the teeth, they can quickly dull the blade. And with 1/16" or 1/8" blades, there's not much blade to begin with.

Cool Blocks are one alternative to metal guide blocks (for sources, see page 31). These guides are made of a phenolic laminate instead of metal. So they can *surround* the blade without damaging the teeth, see photo at right. And they don't create as much heat since they contain dry lubricants to make the blade run smoother and quieter.

But you do have to watch for one thing. Cool Blocks tend to wear down. So check them periodically to make sure the faces are both flat and against the blade. (They can be resurfaced with a file or sandpaper.)

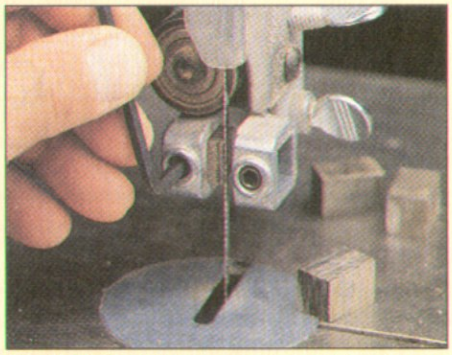

Cool Blocks give extra support to narrow blades. They also contain a dry lubricant, so the blade runs smooth and quiet.

EXTENDING BLADE LIFE

Once I've selected a blade, I want to keep it sharp as long as possible. There are a few things I do to extend the life of a blade. The most important is to make sure the band saw is well-tuned. (A good reference for this is Mark Duginske's *Band Saw Handbook*.)

I also back the tension off the blade after each day's use. (Shop Tip: Count the number of turns it takes to decrease the tension. It's easier to tension it again next time.)

ROUND BACK. Another step I take to extend the life of a blade is to round the back edge. This decreases the wear on both the blade and the thrust bearings. And with a rounded back, the blade will cut curves more smoothly because there aren't any sharp corners to get hung up on.

To round the back of the blade, I use a file or a coarse stone (sometimes called a "tuning" stone, see page 31), see Fig. 1. While the saw is running, file an angle on both back corners. Then carefully round the back.

With smaller blades, round the back of the blade while cutting into a scrap of wood. This prevents the blade from being pushed off the *front* of the band saw's wheels.

Safety Note: Because the stone will produce a lot of sparks, be sure to clean the sawdust out of your band saw *before* rounding the back of the blade.

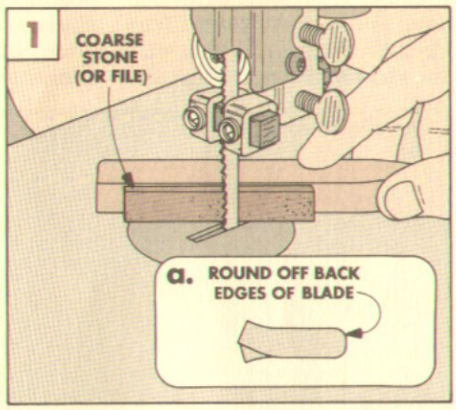

BLADES FOR RESAWING

Recently, I came across an ad for a band saw blade called the "Wood Slicer." It's designed for resawing boards. The Wood Slicer is advertised to make very smooth, fast cuts, and it's said to be "extra durable." But it costs $30. Since I use my band saw for resawing, I decided to give one a try.

I wanted to compare it with other blades I'd used before (and really like) — a Lenox and an Olson. (Both cost about $10; for sources, see page 31.) To make sure I was comparing apples to apples, all three were 1/2" hook tooth blades with 3 teeth per inch.

SHOP TEST. I ran a simple (but unscientific) test. I mounted each on my Delta 14" band saw and set the tension to the same point on the tension scale. Then I resawed a 5"-wide piece of hard maple. I timed how long it took to make the cut, then compared the finished surfaces.

I was surprised with the results. All three blades cut at about the same rate. And the surface of each board was equally smooth.

WOOD SLICER BLADES. So why does the Wood Slicer cost $20 more? The folks at Highland Hardware gave me some answers. (Highland Hardware owns the exclusive rights to the Wood Slicer.) They claim the Wood Slicer is manufactured much better than other band saw blades.

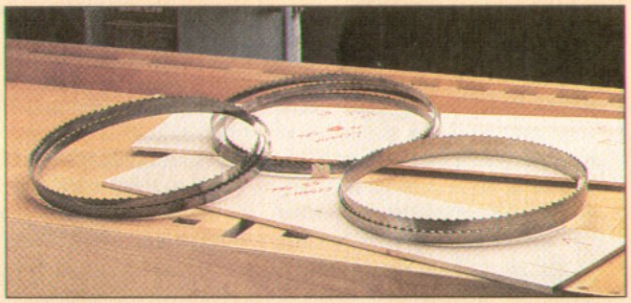

To begin with, the blade is made from a different type of steel than most band saw blades. This allows it to be 10% thinner than the typical (.025"-thick) band saw blade — without losing any of its strength.

They also mentioned the teeth on the Wood Slicer are precision set and individually filed. This reduces the tendency of the blade to lead or wander. And the teeth on the blade are hardened differently too.

Both Lenox and Olson harden their teeth by heat treating them. The teeth on the Wood Slicer are electronically hardened, so there's no chance of tempering problems during the manufacturing process.

One of the best things about the Wood Slicer is that Highland Hardware will stand behind it. If the blade breaks prematurely at the weld (where blades usually break), just send it back, and they will replace it.

CHOICES. So is the Wood Slicer worth $30? From the tests I did, I'm not convinced. I could buy three *new* Lenox or Olson blades for the price of one Wood Slicer. And for me, three blades will last quite awhile.

If you do *a lot* of resawing, you may want to consider the Wood Slicer. But, I've always had good luck with Lenox blades.

Shop Notes

SHOP-MADE DOWELS

■ Sometimes when I'm building a project using a dowel, I want the dowel to exactly match the rest of the wood in the project. The way to do this is to make the dowel from the *same* wood.

PREPARE BLANK. To make a matching dowel, start with an oversize piece of stock. First, cut it about 4" longer than the desired length of the dowel. Then rip the blank to produce a piece the same width and thickness as the desired diameter of the dowel (1½"-dia. for the legs on the projects in this issue).

Now, draw a pencil mark toward each end of the blank to indicate a start and stop point for routing the blank, see Fig. 1.

ROUT & ROLL. To rout the blank into a dowel, use a round-over bit that's half the desired diameter of the dowel. Then pivot the blank into the router bit and begin routing at the left-hand (start) mark, see Fig. 1.

Run the blank across the router bit until reaching the right-hand (stop) mark, see Fig. 2. Then pivot the piece out from the fence and roll it 90° to round over the adjacent edge, see detail in Fig. 2.

CUT OFF ENDS. After rounding over all four edges, the dowel will still have two square ends. Cut these off and the dowel is ready to be used.

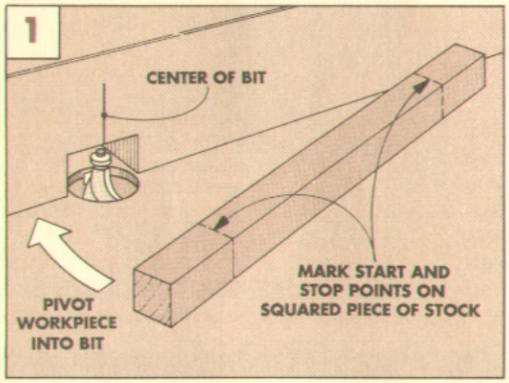

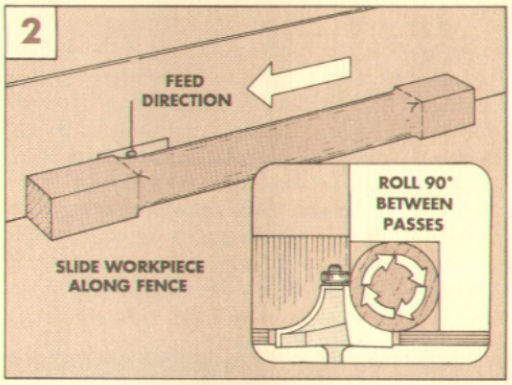

FLUTING TENONS

When a dowel fits tight in a hole, it usually scrapes off the glue as it's driven home — unless the end of the dowel is fluted. I cut flutes using a box-end wrench 1/16" smaller than the tenon, see drawing.

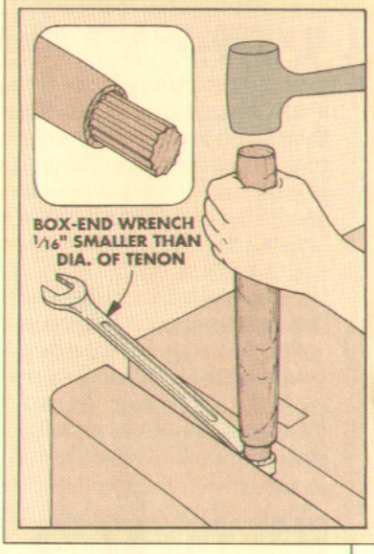

CUSTOM SANDING BLOCK

■ The best sanding block is one that matches the shape to be sanded. But where do you find a sanding block to match the shape of a large cove? (Like on the seat of the Shaker Bench.)

The solution I came up with was to make my own custom sanding block from a 1½"-thick scrap of foam insulation board.

SHAPE THE BLOCK. First, bandsaw or file the foam block to rough shape, see left photo.

Then, to smooth out the shape, place a piece of adhesive-backed sandpaper across the cove and rub the block across the sandpaper, middle photo.

SAND THE COVE. To use the sanding block, remove the sandpaper from the workpiece. Then stick a new piece of sandpaper on the coved face of the sanding block, see right photo.

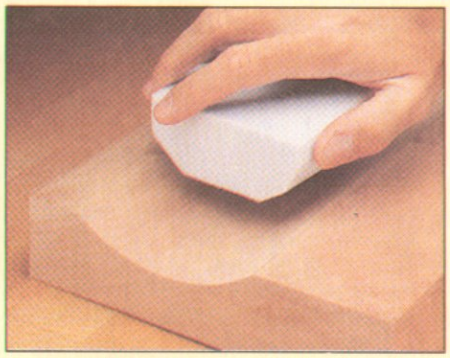

A piece of Styrofoam insulation board can be used to sand an irregular shape. First cut the sanding block to rough shape.

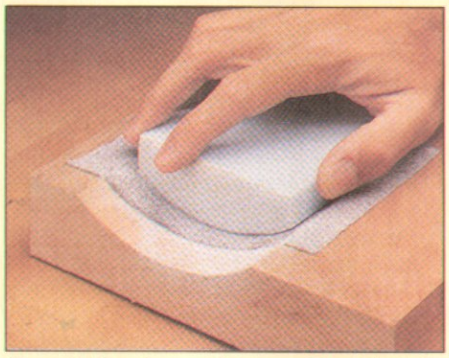

Smooth the shape of the sanding block by rubbing it across a piece of sandpaper stuck to the surface of the workpiece.

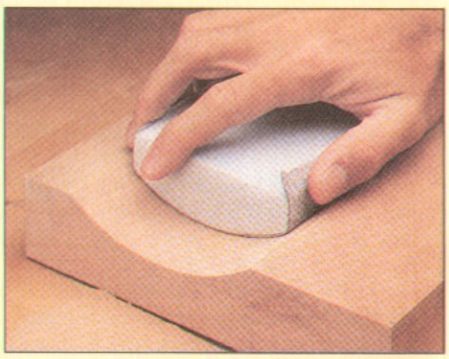

Now peel the sandpaper from the workpiece and stick a fresh piece of sandpaper on the block. Then sand the workpiece.

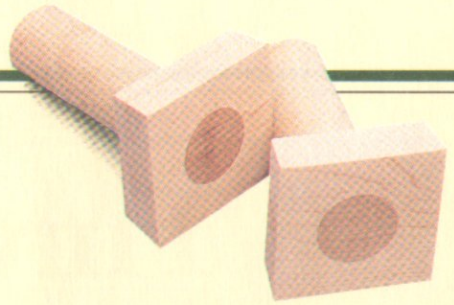

DRAWING ARCS

■ Some of the most interesting projects have curved shapes. And I'll ordinarily use a small compass to draw the parts of a curve. But for large curves (with a radius over 6") I'll improvise.

LARGE ARCS. A simple beam compass can be made from a scrap piece of thin material cut a couple inches longer than the desired radius, see Fig. 1.

A hole toward one end holds a nail that acts as a pivot point. And a notch cut in the other end holds a pencil for drawing the arc.

LARGER ARCS. For larger arcs, I use a flexible stick as a drawing guide, see Fig. 2. First, locate three points on the workpiece. Then drive in a pair of small nails to indicate the desired ends of the arc. The flexible stick bridges the nails to indicate the desired crown (the third point) of the curve.

Trace along the edge of the stick to draw the arc.

BENCH DOGS

■ After building the Portable Workbench, I added a feature of my larger bench — a set of bench dogs. (I wanted to teach my new bench an old trick.)

These dogs are made by gluing a small block onto the end of a short dowel, photo above. Two simple design details make these bench dogs work great.

SIZE. First, the blocks on top are less than ¾" thick, see detail in Fig. 1. So they won't interfere with a hand plane or belt sander when working the surface of a ¾"-thick board.

SHAPE. Also, the sides of the blocks are slightly beveled (canted), see detail. This way, when the vise is tightened the workpiece won't slip out from between the dogs.

Safety Note: To make the small blocks, start with an extra-long, strip. After it's beveled, cut off the blocks one at a time.

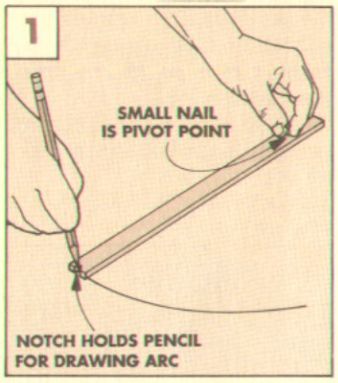

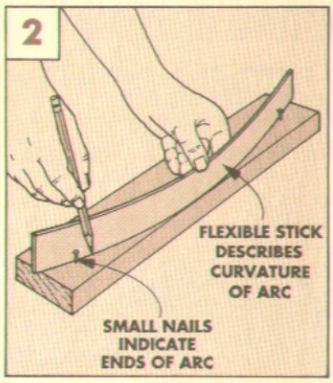

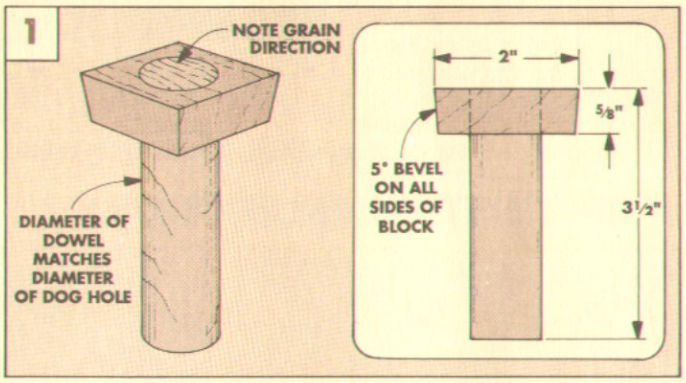

PREVENTING SLIP DURING GLUE-UP

■ When edge-gluing multiple strips into a thick slab, the strips tend to slip around when they're clamped. (Because of the glue.) That's the problem I faced when gluing up the seat of the Three-Leg Stool on page 16.

So I came up with a way to keep the strips in alignment during glue-up. The trick involves cutting the pieces extra long to begin with, then using splines on the ends for alignment.

ROUT SLOT. Start by dry assembling all the strips into a slab, see Fig. 1. (The pieces won't slip if there's no glue.)

Next cut a slot across both ends of the slab using a slot cutter in the router table. (A hand-held router works too.) Note: It doesn't matter if the slot isn't exactly centered on the ends.

ADD SPLINE. Then glue up the slab with a spline in each slot, see Fig. 2.

CUT TO LENGTH. After the glue has dried between the strips, cut the slab to the desired length. By cutting off both ends, the splines — and also the slots — will be removed, see Fig. 3.

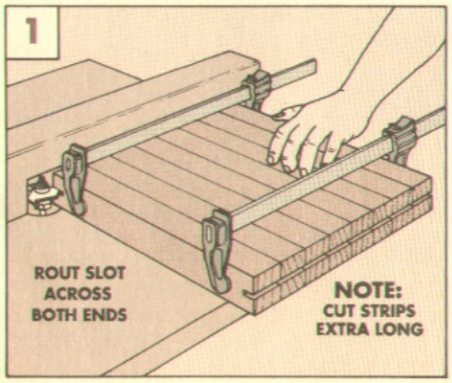

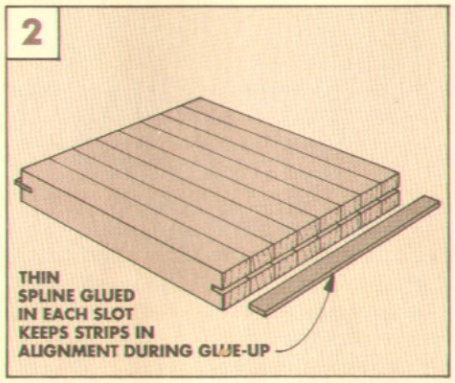

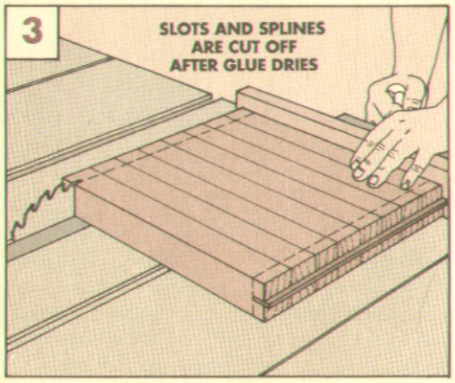

Three-Leg Stool

Normally I don't like surprises. But when working on this Three-Leg Stool, I got a pleasant one after I glued up the blank for the seat.

A PROBLEM. It actually started out as a problem. I thought the seat would look best if it was 1½" thick. But red oak (or any other hardwood for that matter) is not commonly available in that thickness. When it comes to thicker hardwoods, most lumberyards carry 8/4 (1¾" actual thickness) and 6/4 (1 5/16" actual thickness) stock. If you want something different, you have to plane it down.

Planing 8/4 stock is easy if you're running it through a thickness planer. But the blank for the stool seat is wider than the bed of my planer.

To avoid hand planing ¼" off a wide blank, first I ripped the slab into 1½"-wide strips. Then I flipped the strips up on edge and glued them into a blank. The surprise I got was a highly-figured, quarter-sawn blank.

SHAPE. The seat has three sides, all the same length. (There's probably a name for the shape, but I'm not sure what it is.) It's sort of a modified triangle — with large arcs instead of straight lines.

LEGS. For strength, I also used red oak for the legs. You can start with 1½"-dia. oak dowels for these. But since I had enough 8/4 stock left over from the seat blank, I made my own dowels. For more on this, see page 14.

WEDGES & FINISH. To keep the legs firmly in the seat, I wedged the leg tenons. A wedged tenon will hold a joint together better than a joint without a wedge. (For contrast, I cut the wedges from walnut.)

Then for the finish, I wiped on two coats of tung oil, allowing 48 hours between coats.

STEP-BY-STEP INSTRUCTIONS

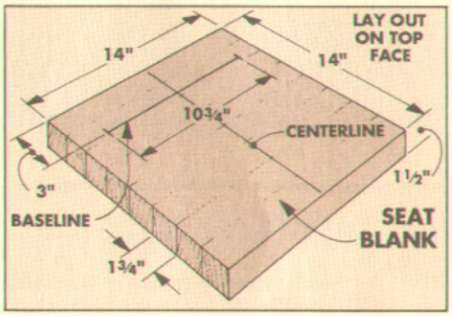

1 *To build the stool, I started by gluing up a seat blank from 1½"-wide strips flipped on edge. Sand the blank, and then draw a centered baseline for a triangle.*

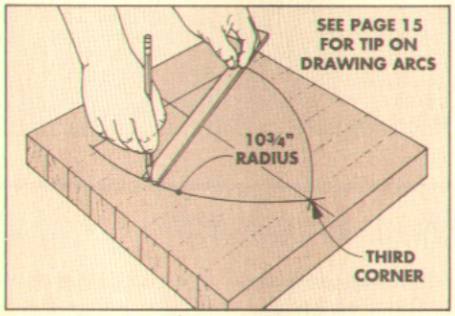

2 *Now the third corner of the triangle can be located and marked. To do this, I used a beam compass to strike two arcs that intersect at the top.*

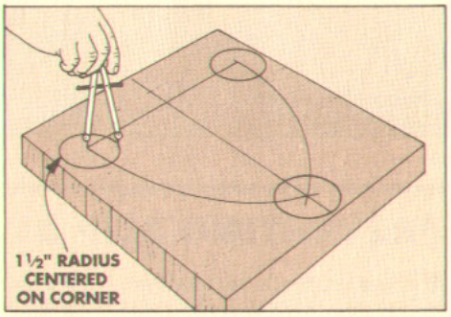

3 *Next, lay out the corners of the seat. To get smooth, rounded corners, use a compass and draw a 1½"-radius circle around each corner of the triangle.*

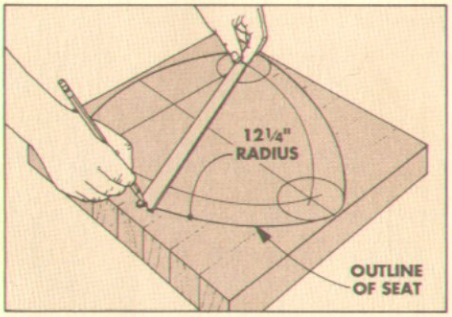

4 *Now the shape of the seat can be established. I used the beam compass set to a radius of 12¼" to draw the arcs. (Use the same centerpoints as in Step 3.)*

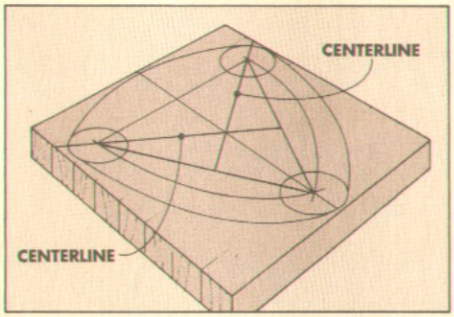

5 *Later, to drill the leg holes at the correct angle, you will need centerlines as reference marks. So complete the triangle and draw centerlines now.*

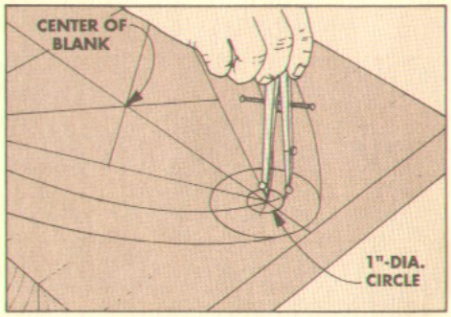

6 *The last step to laying out the seat is to mark 1"-dia. holes for the legs. I used a compass (set for ½" radius) and the same centerpoints as before.*

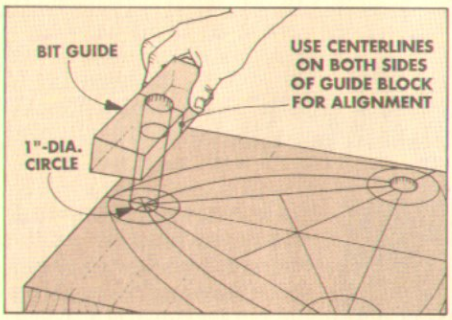

7 *After the leg holes are laid out, they can be drilled at an angle. Position the drill bit guide (see bottom of page) directly over circles drawn in Step 6.*

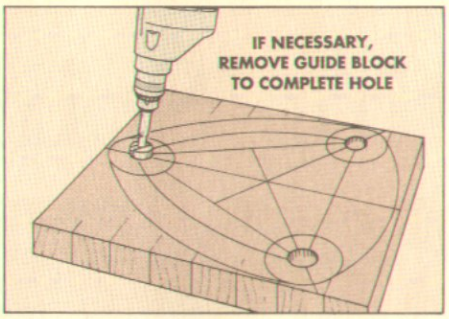

8 *Because my Forstner bit has a short shank, I completed each hole without the bit guide. To do this, eyeball the angle of the bit the rest of the way through the hole.*

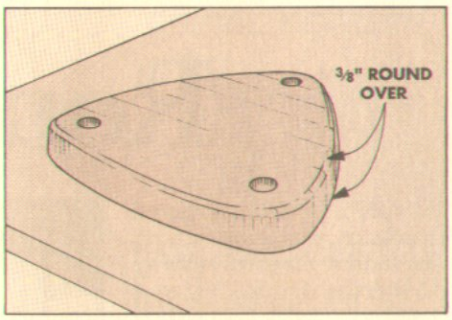

9 *Once the holes are drilled, cut out the seat. For this, I cut just outside the line. Then sanded up to the line. To complete the seat, round over all the edges.*

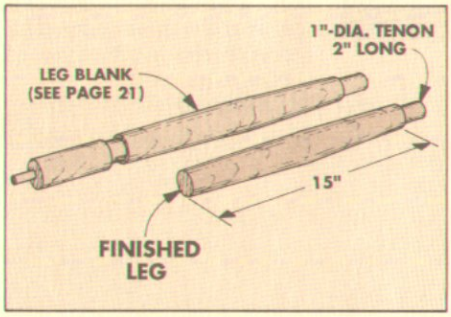

10 *Now the legs can be made. I used the technique described on pages 18 to 21. After the legs are turned to shape, cut them to length, leaving a 2"-long tenon.*

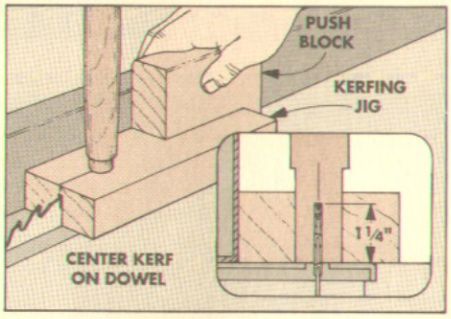

11 *To make the leg joint stronger, I wedged the tenon, refer to Step 14. The safest way I've found to cut a kerf for the wedge is to use a shop-made kerfing jig.*

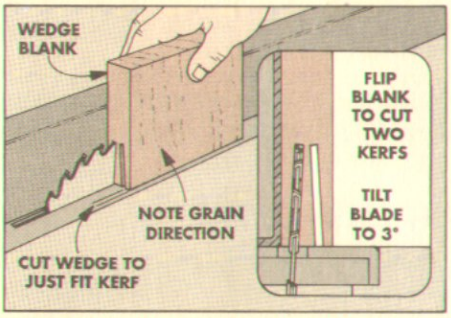

12 *I cut the wedges to fit the tenons from an oversized blank. For a tight fit, tilt the saw blade 3° and cut the wedges so they just fit the kerfs.*

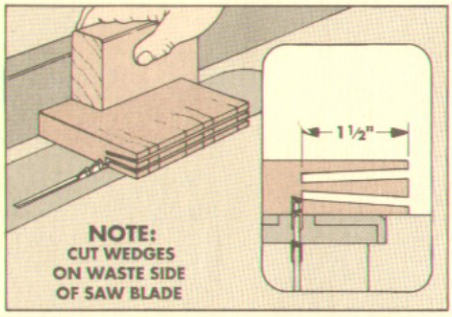

13 *To prevent binding when cutting the wedges to length, I positioned the rip fence so wedges fall to the left side of blade. With a chisel, split wedges to width.*

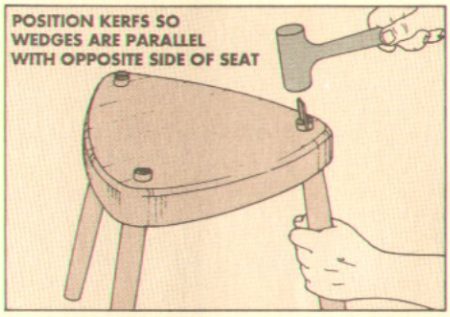

14 *Now the stool can be assembled. First, apply glue to tenons. Next, insert tenons through bottom of seat. Then glue and drive the wedges into the kerfs.*

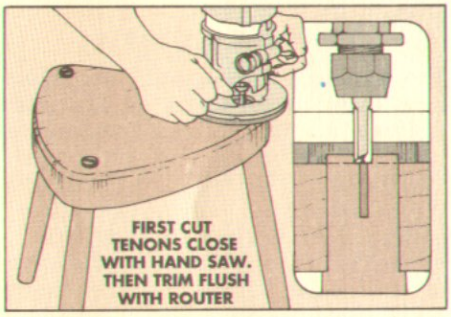

15 *To complete the stool, trim the tenoned ends flush with the seat. To do this, I used a hand-held router with a straight bit set flush to the base plate.*

DRILL BIT GUIDE

The trick to drilling the holes for the legs in the Three-Leg Stool is to use a drill bit guide, refer to Fig. 2. The guide I made is used for drilling 1"-dia. holes at a 10° angle.

To make the guide, start by cutting a scrap piece of 2x4 to length, see Fig. 1. Next, draw centerlines across the block. Then drill a 1"-dia. hole centered on the block. Finally, tilt the table saw blade to 10° and trim off the bottom edge of the block at an angle.

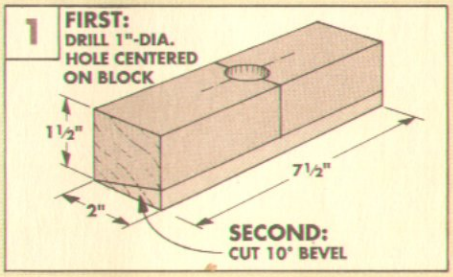

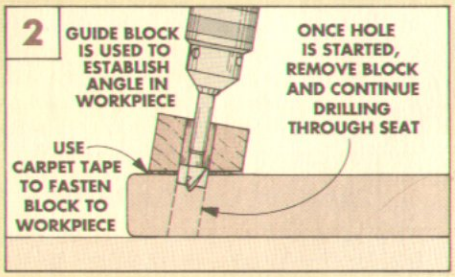

Routing Spindles

Turning a perfectly tapered spindle on a lathe takes time. And turning *identical* spindles takes even more time. I figure it would take me a full day to turn the eighteen identical spindles needed for the Shaker Bench (shown on page 22).

Instead, I built a jig that uses an electric hand drill and a router (with a core box bit) to turn duplicate spindles — in a very short time. It took me about seven minutes to "turn" a 5/8"-dia. dowel into a spindle shaped like a tapered candle stick. (With very little sanding required.)

A DUPLICATING JIG. The basic idea is that the jig acts as a cradle to hold the dowel. The drill is the motor that turns the dowel. And the router bit does the cutting.

The router rides along a pair of tapered runners. As the router moves down the runners, the router bit shapes the tapered spindle.

LEG JIG. After building the spindle jig, I applied the same idea to a jig for duplicating the legs for the Bench and the Stool (page 16). This jig works just like the spindle jig. The main difference is the shape of the runners — they're humped.

One more thing. For safety, find someone else to operate the drill for you. This way you can keep both hands safely on the router.

SPINDLE JIG

Sometimes projects just evolve. Especially jigs. The first version of this spindle jig was built for use with a block plane.

The block plane slid across the top of the jig to "turn" the shape of the round spindle. But that went too slow — the plane had to remove too much waste. So to speed things up, I modified the jig for use with a router.

RUNNERS & GUIDES

The router rides this jig much like a train rides a pair of tracks down a hill. The router (the train) rides on two tapered runners (the rails). The runners are supported by a base (the track bed). And two guide blocks keep the router running straight. (I cut these parts from 3/4"-thick pine.)

Since I wanted a 1/8" taper along the length of each spindle, the router has to go "downhill" along the length of the jig. To do this, cut a 1/8" taper on the **runners (A)**, see Fig. 1. Then the **guide blocks (B)** are screwed to the runners.

Now the runner and guide block assemblies are ready to be screwed to the **base (C)**, see Fig. 1. The trick is to screw the assemblies down so the base of the router just fits between the guide blocks.

Note: To determine how far apart the guide blocks should be from each other, measure the diameter of the base plate on your router and add 1/16". Also, when screwing the assemblies down, leave an overhanging lip at the front of the base. This lip is used to clamp the jig to the workbench.

TAILSTOCK & HEADSTOCK

The ends of the jig are enclosed by two blocks. The **headstock (D)** (like the head on a lathe) is at the drill end of the jig, see

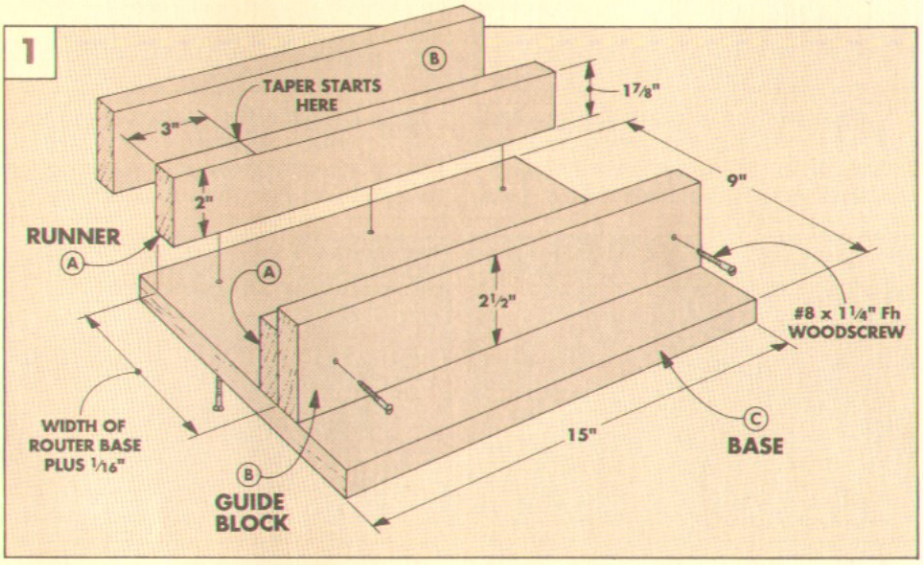

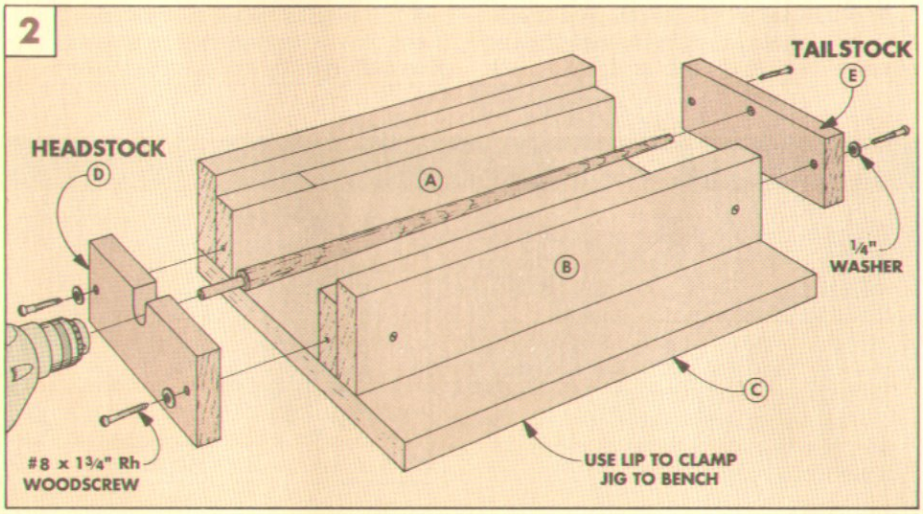

Figs. 2 and 3. This piece has a short slot for the workpiece (a dowel) to rest in.

The **tailstock (E)** is located at the other end of the jig. This piece has a shallow hole drilled in it for holding the free end of the dowel. (Because of the friction created by the spinning dowel, I used ¾"-thick hard maple for the headstock and tailstock.)

Shop Note: The dimensions shown on the headstock and tailstock are specific to the diameter of the spindles for the Shaker Bench. But you could easily modify both of these blocks for other diameter dowels.

To allow for slight adjustments when setting up the jig for turning, I drilled oversized screw holes in the ends of the headstock and tailstock, refer to Figs. 2 and 3. Then I used screws and washers to keep them in place.

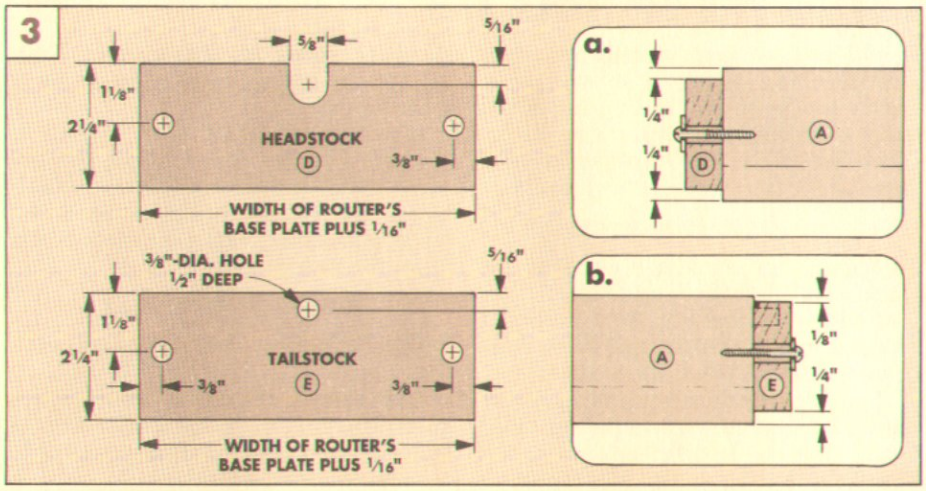

PREPARING DOWELS

The Shaker Bench requires eighteen spindles that are 14" long. But the dowels for the spindles must start out a little longer (18"). The extra length allows enough room to "chuck" one end of the dowel in the drill and insert the other end into the jig.

PREPARING BLANKS. To prepare the spindle blanks, first cut ⅝"-dia. dowel rod to a rough length of 18", see drawing at right.

Shop Note: Start with the straightest dowels you can find. And, when mass producing parts like this, I'll usually cut two or three extras. One of the extras is used to set up the jig. And the others can be used for practicing the "turning" technique and replacing rejected spindles after they're all made.

Next, cut a round, centered tenon (1⅜"-long) on the ends of each dowel, see box below. One of the tenons will be chucked in the drill. (I used a drill with a ⅜" capacity chuck.) Note: If you're using a ¼" drill, you'll have to cut one of the tenons smaller in diameter so it will fit the smaller-capacity chuck.

The other tenon will rotate in the shallow hole drilled in the tailstock, refer to Fig. 3.

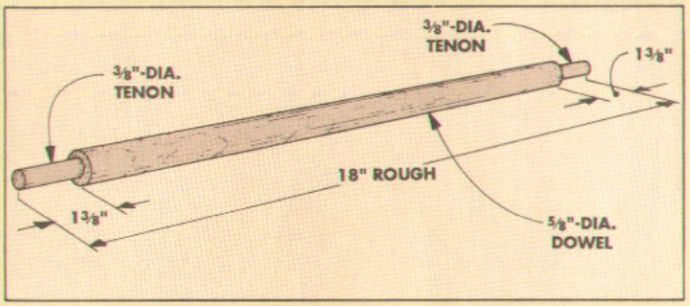

After the tenons are cut, the dowels are ready to be "turned" into spindles. Adjusting the jig and turning the spindles are explained on the next page.

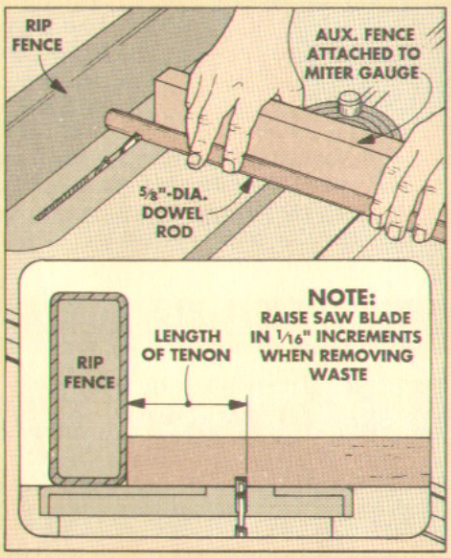

1 *To cut a ⅜"-dia. tenon, start by raising the saw blade 1/16" above the table. Then position the rip fence to establish the shoulder of the tenon.*

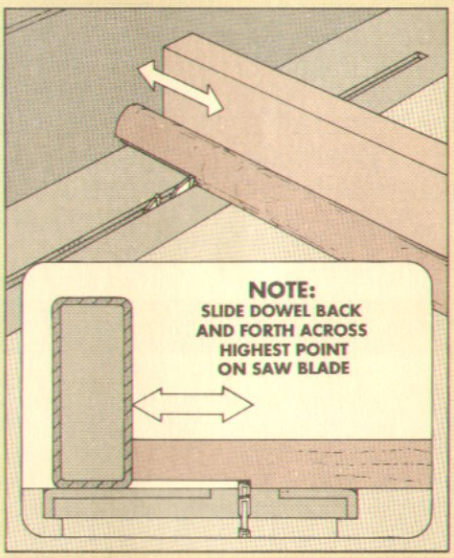

2 *Now slide the dowel back and forth across the top of the blade. What you're doing is removing the waste with the side of the teeth.*

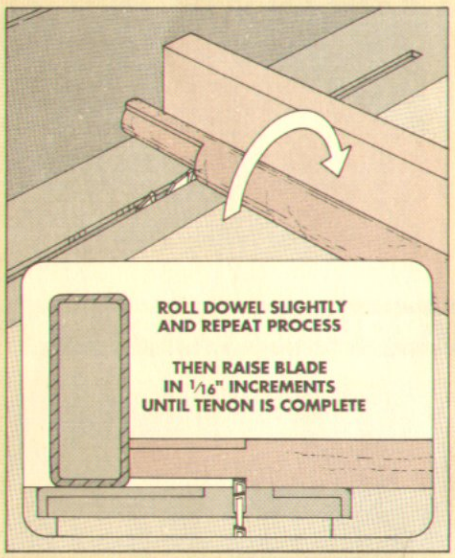

3 *To continue cutting the tenon, rotate the dowel slightly and slide it back across the blade. Repeat this until the end of the dowel has been reduced to a tenon.*

USING THE SPINDLE JIG

The jig (as shown here) is designed to taper a 5/8" dowel to a diameter of 3/8" at one end. But to get the correct taper, you have to make some slight adjustments to the jig. (Shop Note: I fine tune the taper on a test dowel before tapering the actual spindles.)

ADJUSTING THE JIG

To begin the adjustment, insert a spindle blank in the jig, see drawing below.

ADJUSTING HEADSTOCK. Now mount a core box bit in the router and lower it 1/4" below the base of the router, see Detail a.

Then to check the alignment, place the router on the runners where the taper is to begin. (For the spindles on the Shaker Bench, the taper starts 4 1/8" from the shoulder of the tenon, see Detail a in drawing.)

Next, check the distance between the bottom of the bit and the dowel. If everything is set up right, the spindle blank should just be touching the router bit, and the router should be resting flat on the runners. If any adjustments are necessary, raise or lower the headstock.

ADJUSTING TAILSTOCK. Now move the router to the other end of the runners and check the tail end of the blank, see Detail b in drawing. The bit should just touch the tenon. If necessary, adjust the tailstock just as you did for the headstock.

ROUTING SPINDLES

With the jig properly adjusted, you can cut a test spindle.

CHUCK INTO DRILL. To do this, first securely chuck the end of the spindle blank in the drill. Shop Note: A variable speed drill, turning clockwise, works best.

BLANK INTO JIG. With one end of the blank chucked in the drill, lubricate the other end that goes into the tailstock. (I used paraffin wax.) This reduces friction so the spindle blank can spin freely.

TURNING. The nice thing about using this spindle jig is it's a simple (but noisy) operation. It's probably best to find a friend to help. One person can operate the drill. (Just about anyone can do this. It's a matter of holding the drill and turning it on.) But the person operating the router will require a little more skill. (That would be you, right?)

The idea is for the drill to begin turning the spindle blank. Then the person operating the router sets the router on the runners (next to the drill), and moves the router slowly to the other end of the spindle. One pass, one smoothly tapered spindle.

A note about speed. For the smoothest taper (that requires minimal sanding), the drill should turn the workpiece at a constant speed — about medium on most drills. And the router should be advanced very slowly (about 1/16" per second). Otherwise, the result will look more like a "threaded" dowel than a tapered spindle, see box below.

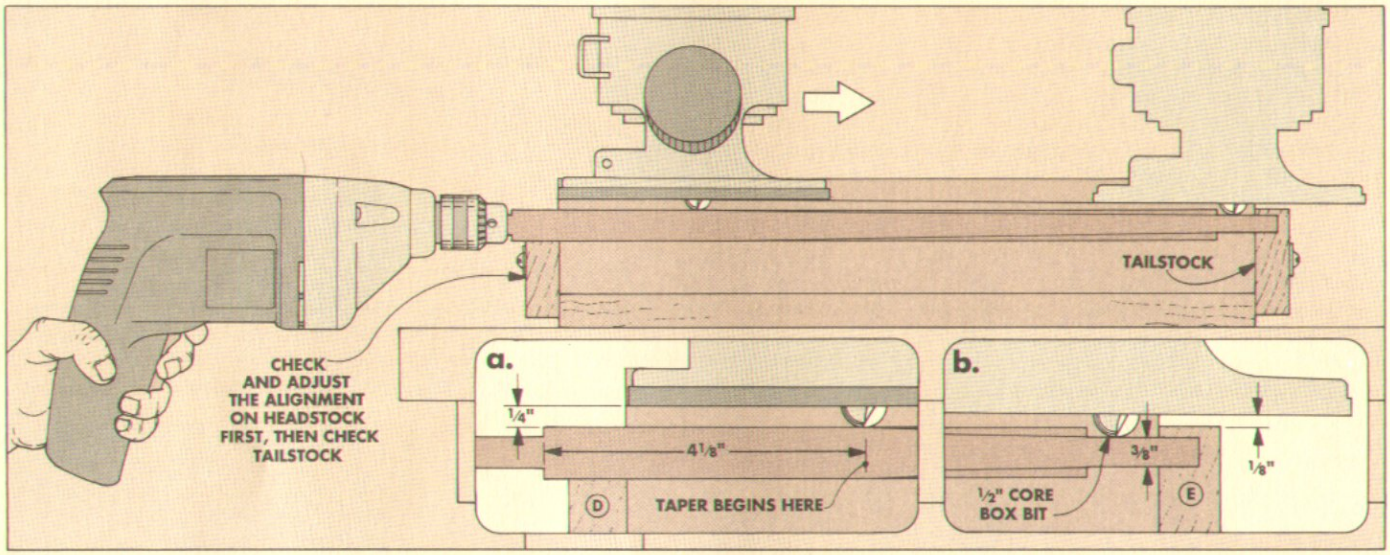

1 *To adjust the jig, first set the depth of the router bit 1/4" below the base plate of the router. Then place the router on the runners at the drill end of the jig.*

2 *Next, check that the router bit is just touching the dowel where the taper begins. If adjustment is necessary, move the headstock up or down.*

3 *Now slide the router down the runners to the other end of the jig. Then check that the bit is just touching the tenon. Adjust the tailstock if necessary.*

TROUBLESHOOTING

◄ *If your dowel ends up looking like a threaded screw, you're moving the router too fast. Move the router very slowly — but fast enough so it's not standing still (a rate of about 1/16" per second).*

If the dowel "chatters" as it's spinning, ► lower the speed of the drill slightly. If this doesn't help, tape a 1/4"-thick block to the base plate, behind the bit with carpet tape. The block keeps the dowel from whipping.

LEG JIG

The legs for the Shaker Bench and the Three-Leg Stool could be turned on the lathe — or you could use a jig similar to the one for turning spindles. The only differences between the legs and the spindles are their length and shape. (The legs are longer and fatter in the middle like a cigar.)

THE JIG

The leg jig works just like the spindle jig. A drill is used to spin the workpiece while a core box bit in the router cuts the shape.

JIG DIFFERENCES. I started the leg jig just as I did with the spindle jig. First, the runners and the guide blocks are cut to size, then screwed together. Then they're screwed to a base, see Fig. 1. (For these, I also used ¾"-thick pine.)

All the parts are longer to accommodate longer (24") dowels for the legs. And the runners have a small ⅛" "hump" (arc) in the center to produce the cigar-shaped leg. (For more on how to lay out an arc on the runners, see page 15.)

Note: The headstock and tailstock pieces are also different, see Fig. 2. They have larger holes for supporting the larger diameter leg dowel. (And just like the spindle jig, I used ¾"-thick hard maple for the headstock and tailstock.)

After the jig is built, the next step is to prepare the dowels for the legs.

PREPARING DOWELS

Each leg starts out as a 24"-long, 1½"-dia. dowel. (If you'd like to make your own dowels, refer to page 14.)

To prepare the dowels for the leg jig, tenons must be cut on the ends, see Fig. 3. Later, the smaller tenon will be trimmed off once the leg is cut to length. And the larger tenon will be used to mount the leg.

Also, to avoid plunging the bit into the dowel at the start of routing the cigar shape, I cut a relief notch near the smaller tenon, see Fig. 3.

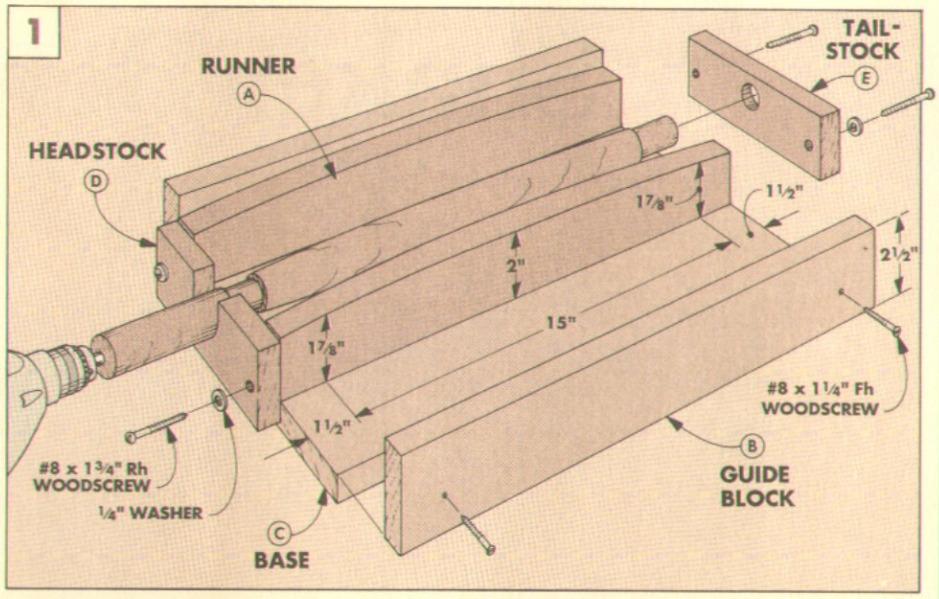

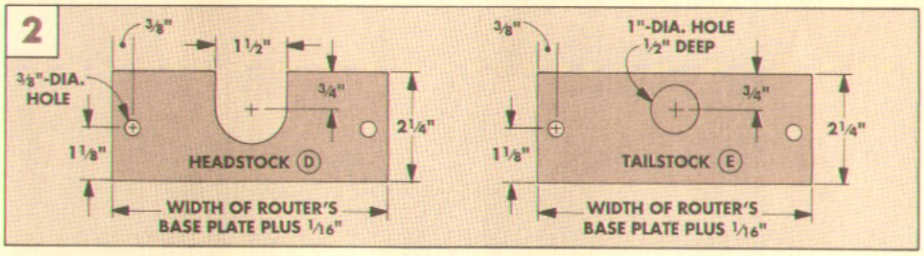

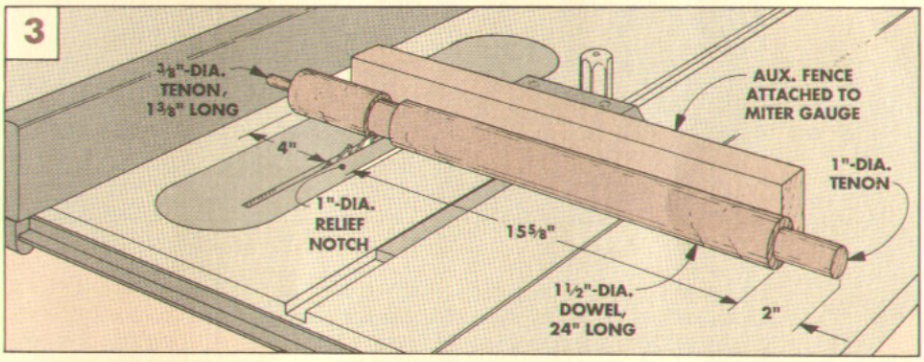

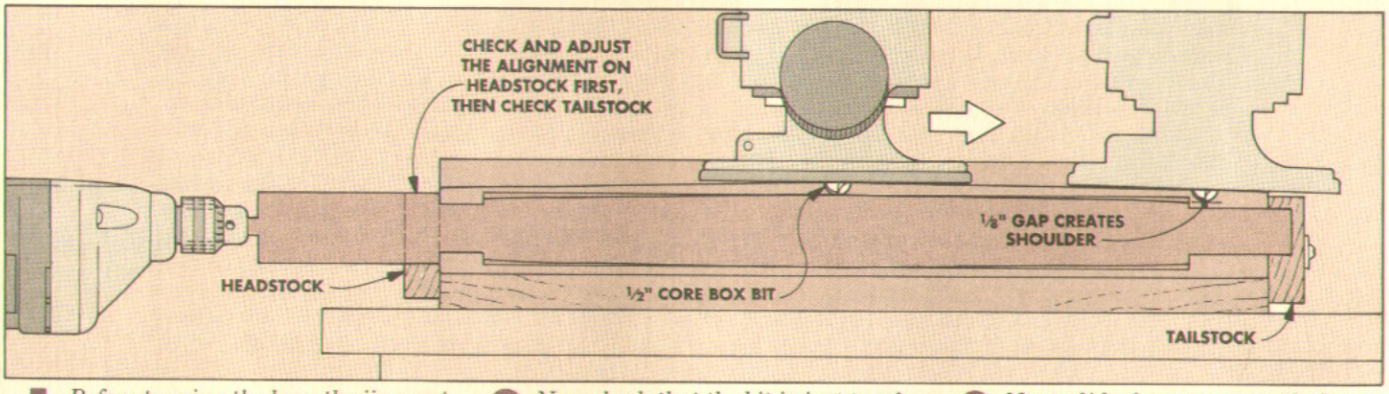

1 *Before turning the legs, the jig must be adjusted. To do this, first set the bit ¼" below the base plate of the router. Then place router in the middle of the runner.*

2 *Now check that the bit is just touching the dowel, and the router base is on the runners. If necessary, move the headstock up or down until the bit just touches.*

3 *Next, slide the router over the larger tenon near the tailstock. If necessary, adjust the tailstock so there's a ⅛" gap between the bit and the tenon.*

Shaker Bench

This Bench isn't built the Shaker way, but it would take a Shaker craftsman to notice. The biggest differences are the kinds of tools used.

I'm always looking for a better way to do something. For this Shaker Bench, I started with the seat. The Shakers would have shaped the contoured seat by hand, using a scorp or inshave. But that's a lot of work, and unless you've had experience with these hand tools, it can be difficult to get a uniform shape. Instead, I used the table saw to rough-shape the profile on the seat.

SPINDLES & LEGS. I also made the legs and spindles for this bench differently than the Shakers would have. The Shaker craftsman probably used a lathe, and no two of the pieces turned out exactly the same. (That's part of the unique Shaker look.)

But I wanted to save time *and* produce identical legs and spindles. So I made a couple of jigs to form these parts with a router and an electric drill. A bit unusual, maybe, but it produces a ready-to-use leg or spindle in a matter of minutes. (The jigs are shown in a separate article that begins on page 18.)

DIFFERENT WOOD COLORS. There's something else about different ways of working. The Shakers knew their woods and how to make the best use of various types of wood. They used a strong wood (such as maple) for the legs. And a softer, easier to shape wood (such as pine) for the contoured seat.

Since I didn't have to hand-shape the seat, I didn't have to use a soft wood. But I still like the look of contrasting woods so I used cherry for the seat and back rest, and hard maple for the spindles and legs.

FINISHES. To make a project less flashy looking, the Shakers often disguised contrasting colors of wood with a stain or paint. Here again, I used an alternative technique for finishing. It's a technique that I've never used before, refer to page 30.

EXPLODED VIEW

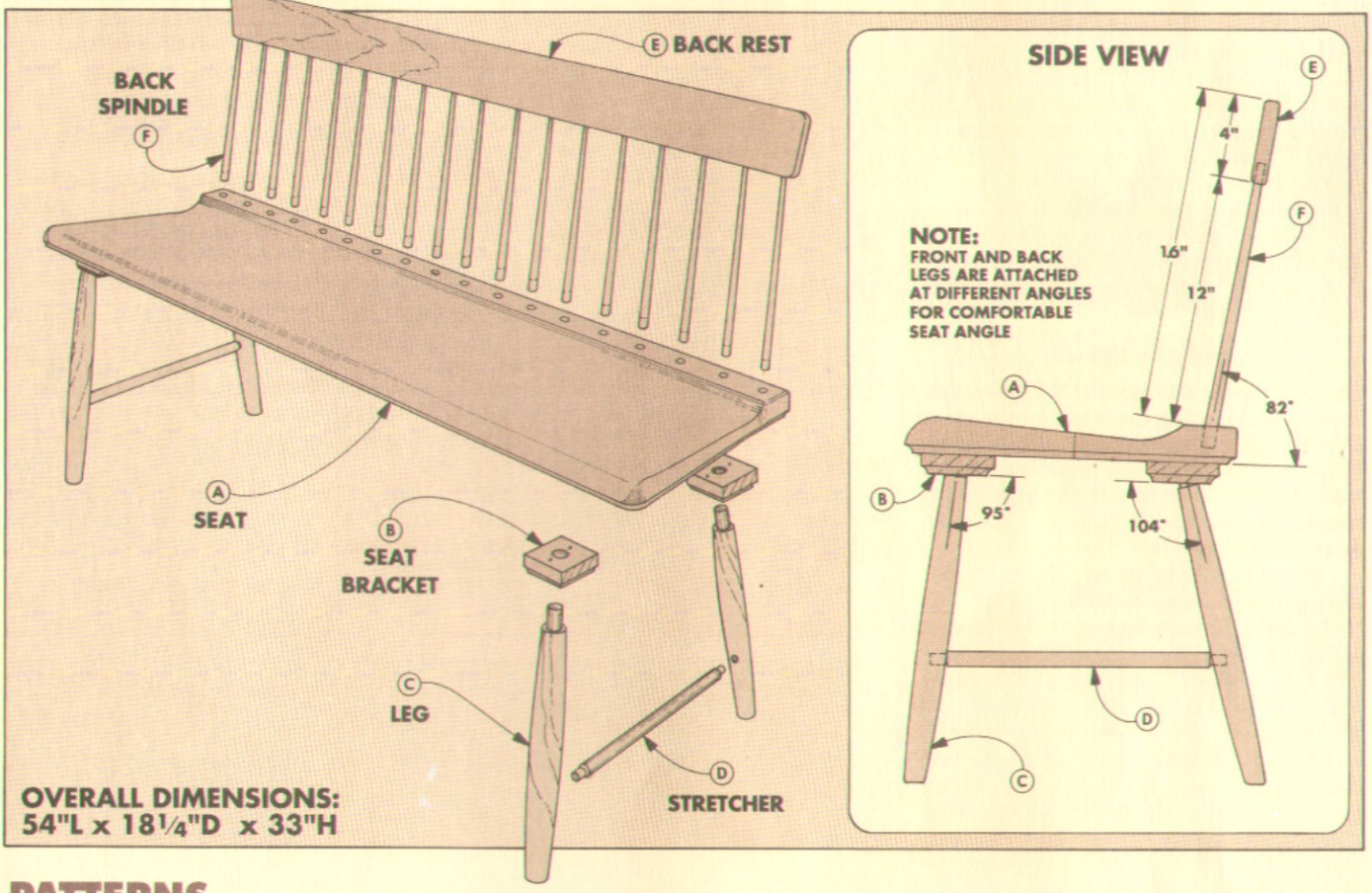

PATTERNS

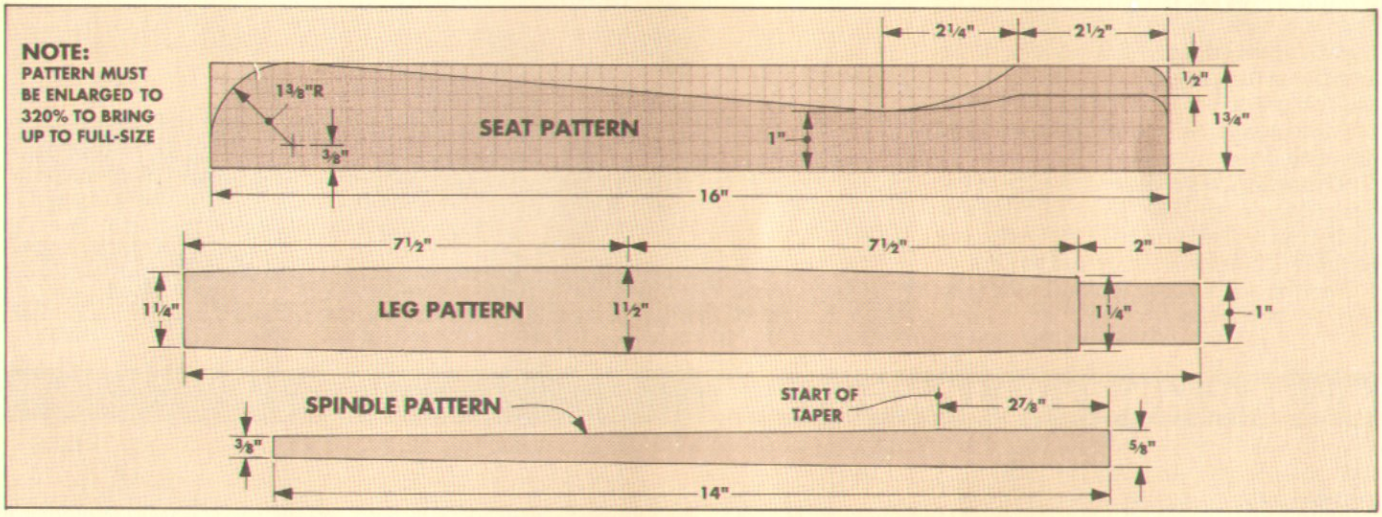

MATERIALS

A	Seat (1)	1¾ x 16 x 54
B	Seat Brackets (4)	1 x 3½ x 2½
C	Legs (4)	1½ x 17 dowel
D	Stretchers (2)	⅝ x 18 (rgh) dowel
E	Back Rest (1)	¾ x 4 x 54
F	Back Spindles (18)	⅝ x 18 (rgh) dowel

CUTTING DIAGRAM

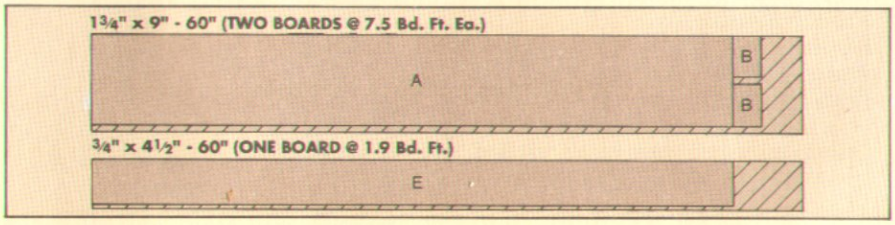

SHAPING THE SEAT

For the Shakers, the seat for a bench like this would probably have been cut from a wide, thick slab of wood. But finding wood that size today is almost impossible. So for this Bench, I started out with two narrower boards. This makes it easier to shape the seat on the table saw.

First, I cut the two blanks to the same rough size from 1¾"-thick stock, see Fig. 1. Then, to make it easier to handle, I started work on the blank for the back half of the seat, see Fig. 1a.

SPINDLE HOLES

Before shaping the back half, I laid out a series of holes along the blank for the spindles. But I didn't mark the position of these holes on the workpiece right away — I started with a template instead. That way the template can be used again later for a couple other operations.

LAYOUT TEMPLATE. First, rip the template to match the width of the area that will be flat along the back of the seat (2½"), refer to Fig. 1a. Note: The template is cut *shorter* than the seat blank — it's the finished length of the *back* of the seat (53"), see Fig. 2.

Then mark the position of the spindle holes on the template and drill a series of holes at each mark, see Fig. 2a. (The holes should match the diameter of a scratch awl.)

Next, place the template on the workpiece and use the scratch awl to mark the locations of the holes for the back spindles.

ANGLED WEDGE. For comfort while sitting, the back spindles are installed at a slight angle. And to drill the holes for all the spindles at the *same* angle, I wanted to use the drill press. But there was a problem — the drill press table doesn't tilt in the right direction (front-to-back).

So instead, I bevel-ripped a wedge to the desired angle, see Figs. 3 and 3a. Then this wedge can be used to support the workpiece on the drill press, see Figs. 4 and box below.

Now the holes can be drilled for the spindles, see box below.

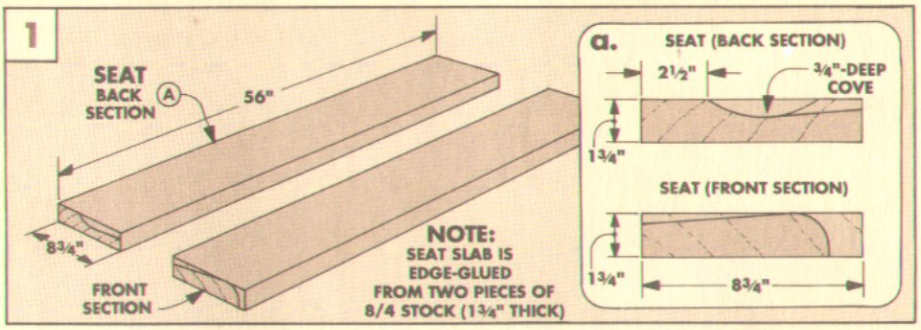

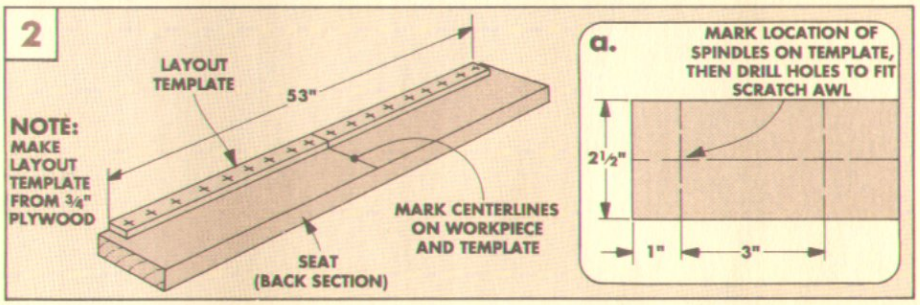

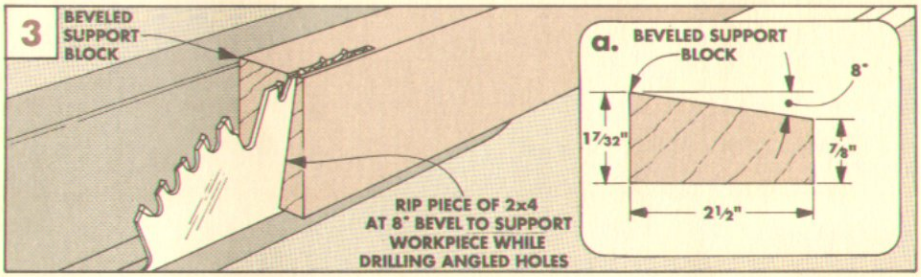

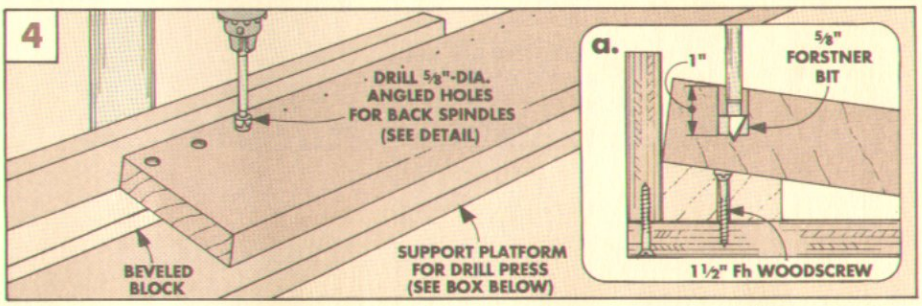

DRILLING HOLES IN LONG STOCK

You need about five hands to balance a long, heavy workpiece on the drill press table. Especially when drilling angled holes. So before drilling the holes in the back half of the seat, I made a support platform and bolted it to the drill press table, see Fig. 1.

Start with a piece of ¾"-thick plywood 2" *longer* and *wider* than the workpiece. Then screw a short fence at the back edge of the platform. After attaching a beveled block to the platform, the angled holes can be drilled with two hands, see Fig. 2.

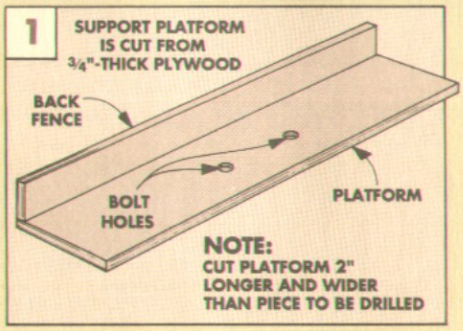

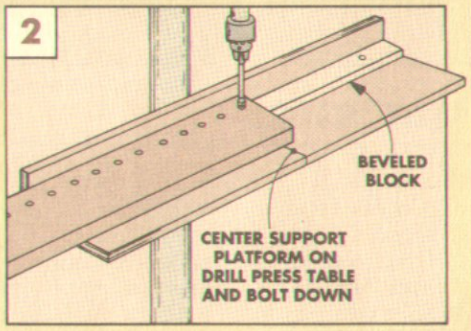

I didn't make the layout template just for marking the position of the spindles. There was another reason — the template can be used when setting up the table saw for cutting a cove on the seat blank.

CUTTING THE COVE

To set up for cutting the cove, first adjust the height of the blade to the desired depth of the cove (¾"), see Fig. 5.

Then, place the template on the saw table on the outfeed side of the blade and adjust the miter gauge angle to 56,° see Fig. 5. This determines the width of the cove (for a 10"-dia. saw blade).

GUIDE FENCE. Now, with the back edge of the template touching the front tooth of the blade, clamp a long, straight guide fence to the saw table, see Fig. 6.

SECOND GUIDE FENCE. When the guide fence is clamped in place, lower the saw blade and clamp a second guide fence to the other side of the workpiece, see photo at right and Fig. 7. Position this fence parallel to the first so the distance between the two is equal to the width of the workpiece (8¾").

CUT COVE. While cutting the cove, the drilled side of the slab (the spindle side) should be against the upper guide fence.

Shop Note: Cut the cove in multiple passes. Start with the blade 1/16" high and then raise the blade 1/16" between passes.

Safety Note: Use a push stick to keep your hands clear of the saw blade as the end of the slab passes through the blade.

OUTFEED SUPPORT. A word about balance — since the slab is long and awkward to handle, there must be some additional support for the piece as it leaves the saw table. If you don't have an outfeed table, clamp a piece of plywood between the two guide fences to "lengthen" the saw table, see photo. This will catch the slab and support it as it extends off the end of the saw table.

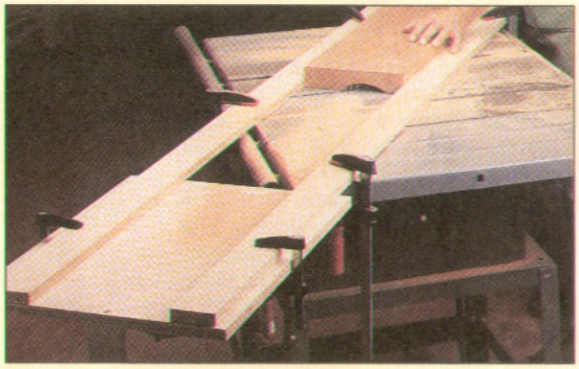

It's easier to cut a cove on a long workpiece with a pair of guides. And a platform (with a support leg) clamped between the guides keeps the piece from tipping down.

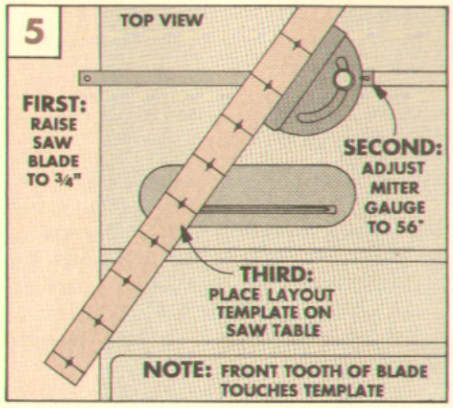

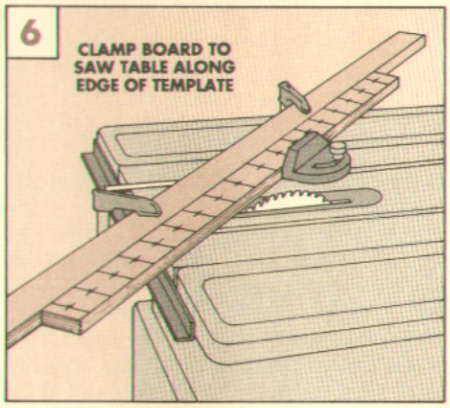

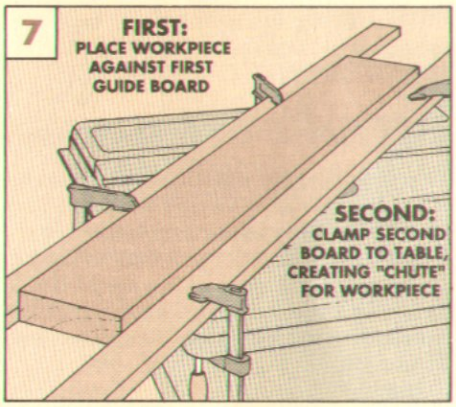

JOINING THE SEAT HALVES

After the cove has been cut on the back section of the seat, the front section can be shaped. This shape is actually an extension of the cove on the back section.

But first the two sections of the **seat (A)** are edge-glued together, see Fig. 8.

TEMPLATE. The shape of the seat is shown in a scale drawing on page 23. But I didn't draw this shape directly on the workpiece. Instead, I first enlarged the shape and made a template from the enlargement.

To do this, have the drawing on page 23 enlarged 320% at a copy shop, or re-draw the shape full-size onto a piece of grid paper. Then transfer the shape to a piece of scrap plywood (at least ½" thick). Finally, cut the template to rough shape and sand it smooth.

Now transfer the shape from the template to the ends of the seat, see Fig. 8.

SET UP TABLE SAW. Now the template can be used as a set-up gauge for cutting the shape on the front half of the seat, see Fig. 9. The actual shaping is done with a stacked dado blade in the table saw.

First, the blade is tilted to match the angle of the curve (84½°), see top drawing in Fig. 10. Then the fence is moved until the inside edge of the blade aligns to the desired area of cut. (Set up to start shaping where the cove shape "blends" into the flat shape.)

CUT & MOVE. After each pass, use the template to adjust the position of the rip fence and the height of the dado blade, see Fig. 9.

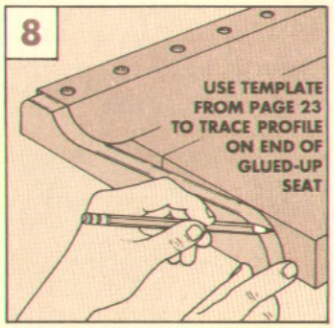

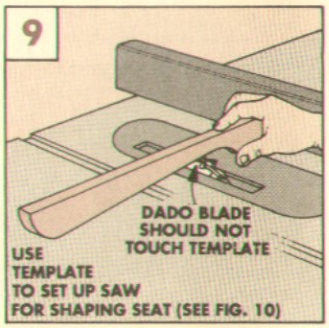

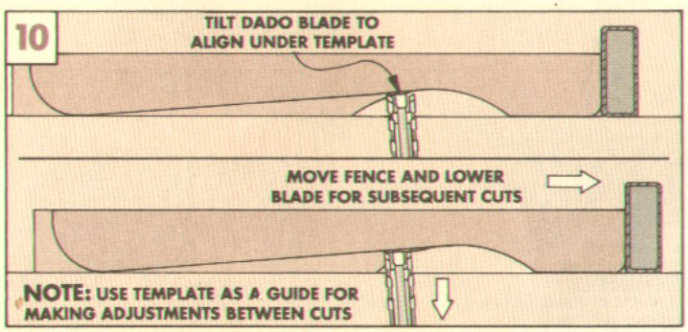

SMOOTHING THE SEAT

When the top side of the blank is shaped, the seat should now look a bit more inviting to sit on. But there's still a sharp corner at the front. Before cutting off this corner, rip the seat to finished width, see Fig. 11.

Then knock off the square corner with a bevel cut on the table saw, see Fig. 11a.

PLANE & SAND. The bench is beginning to look more sculpted. But there's still a series of ripples running the length of the blank where the dado cuts didn't quite align.

To smooth out the seat, I used a hand plane, just like the Shakers would have, see Fig. 12. (I used a low-angle block plane.) Plane the entire length of the seat, starting at the cove and working toward the front.

Shop Note: For the most consistent shape while planing, use the pencil marks on the ends of the seat as a visual guide. And the best way to tell when to quit planing is to use your hand — feel the surface of the seat to check for dips and ridges.

When all the bumps are gone, sand the surface of the seat smooth, see Fig. 13.

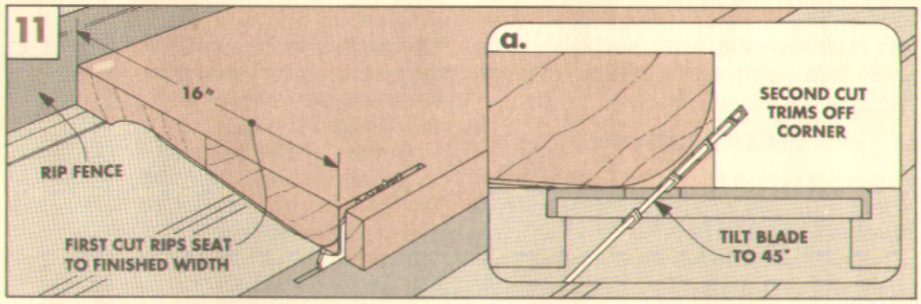

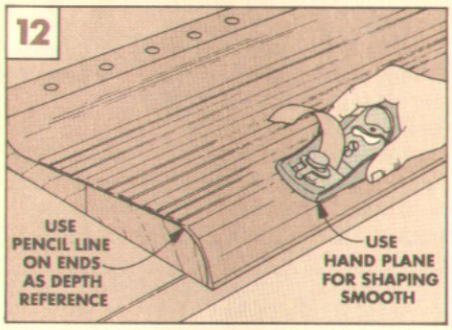

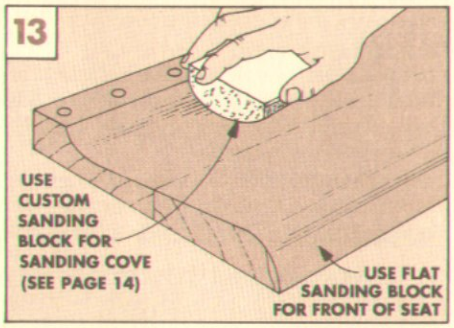

CUTTING OFF THE ENDS

After the top of the seat is smooth, the ends of the bench can be shaped next. And like most Shaker designs, the simpler the better.

TEMPLATE. When it came time to lay out the shape on the ends of the seat, I had a certain look in mind. Then I noticed that the template I used for the top of the seat was just about right, see Fig. 14.

At first I thought I would cut the ends to *match* the shape of the template. But I didn't like the look of a big "bump" sticking out at the back of the seat. So I modified the shape of the template to "flatten" the area at the back, see Fig. 14a.

KERF & SABRE SAW. After drawing the shape of the modified template on the ends of the seat, the ends can be cut to shape. Note: This also cuts the blank to length.

The easiest way to shape the ends of the seat is to use the sabre saw. But to keep the blade from bending when cutting such thick stock, first I made a series of short relief cuts at right angles to the pencil line, see Fig. 15.

Then, these short cuts can be connected with a smooth cut that follows the line.

SAND SMOOTH. The blade of the sabre saw will leave some "ripples" on the ends of the seat. To remove these and smooth the curves, I used a hand drill with a sanding drum, see Fig. 16. Shop Note: A drill guide (such as a Portalign) helps to keep the ends square to the faces.

ROUT COVE. There's one more decorative detail involved in shaping the seat. It's simply a small cove that's routed all around the lower edge, see Fig. 17.

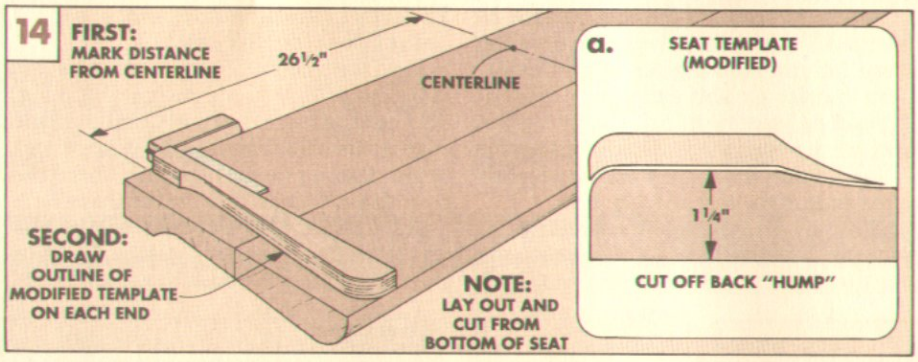

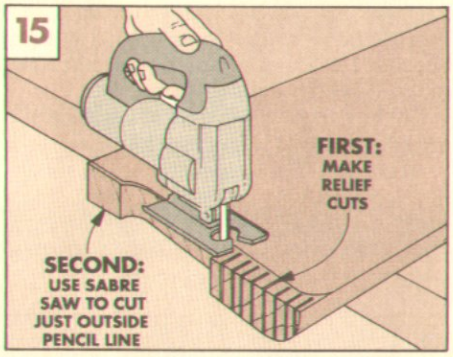

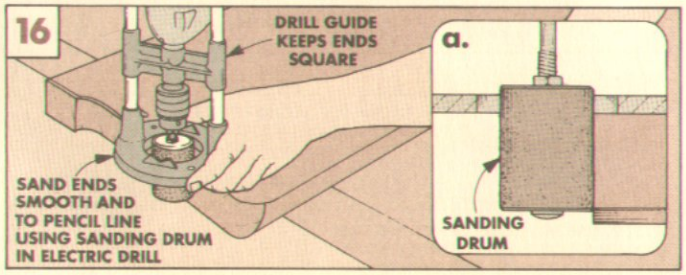

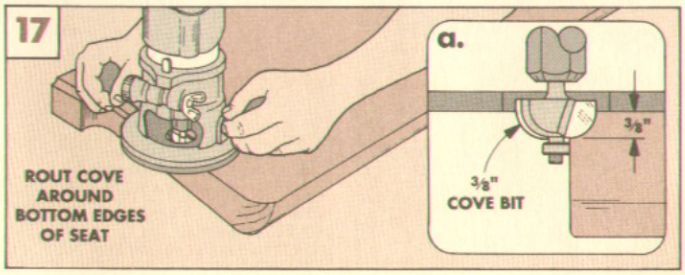

SEAT BRACKETS

Joining legs to the seat of a bench can present some problems. There are two things to be concerned with — strength and comfort. But the solutions aren't complicated.

BRACKETS. There's a lot of stress on the legs of a bench. If they're not securely attached to the seat, the whole bench can wobble, or the legs can even snap off. So on this Shaker Bench, I added blocks to increase the strength of the leg joints.

The **seat brackets (B)** start out as a 1"-thick piece of stock (again I used cherry), see Fig. 18. Then the brackets are cut to finished dimensions. Note: Cut the rectangular blocks so that when they're attached later, the grain will run parallel to the grain on the seat, see photo at right.

ANGLED HOLES. The seat brackets add strength to the leg joints. And angled holes in the blocks allow the legs to be spread out under the seat. This adds stability.

By drilling a steeper angle for the back legs, the seat will tilt slightly to the back, refer to the Cross Section on page 23. This makes the bench more comfortable to sit on.

Drilling holes at an angle can be almost impossible if the table on your drill press doesn't tilt. But you can get the same result by keeping the table flat and tilting the workpiece, refer to Fig. 19.

For the holes in the seat brackets, I did this by resting the brackets on blocks that were beveled to the desired angle, see Fig. 19a.

A rectangular block strengthens each leg joint. First, an angled hole is drilled on the drill press. This guides an electric drill that completes the mortise for the leg.

ROUT COVES. After the angled holes have been drilled in the seat brackets, a cove can be routed around the bottom edges. This matches the cove routed earlier on the seat, but I routed these coves on the router table, see Fig. 20.

ATTACH TO SEAT. Now the seat brackets can be screwed to the seat. Note: The brackets are positioned an equal distance from the centerline of the seat, see Fig. 22, and 3/4" from the edges, see Fig. 21.

After the brackets have been glued and screwed to the bottom of the seat, I used the angled holes as a guide for drilling the mortises into the seat, see Fig. 22a.

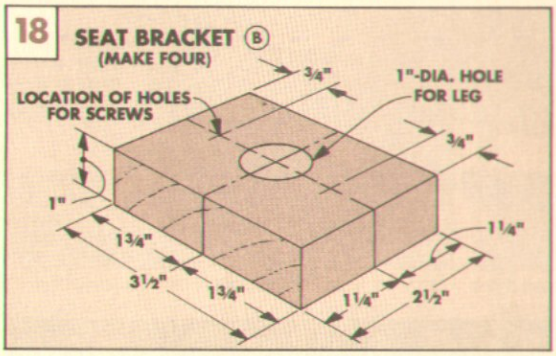

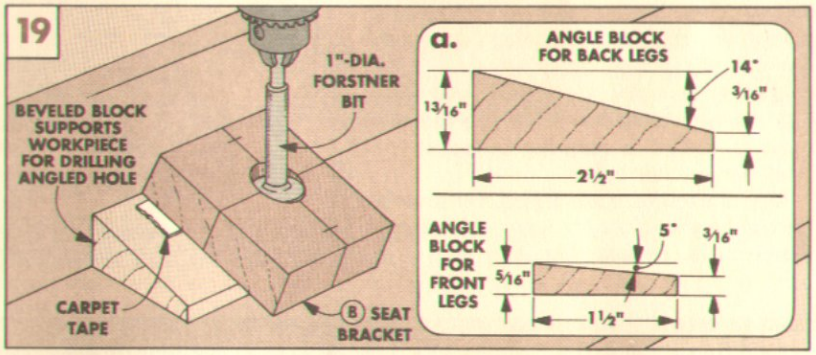

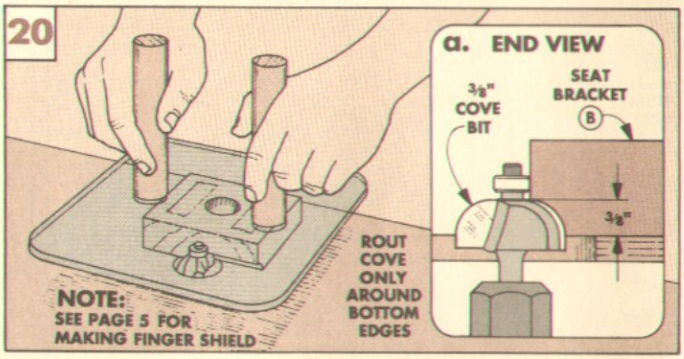

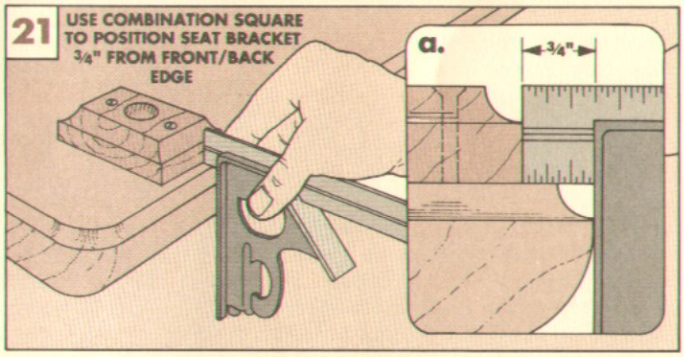

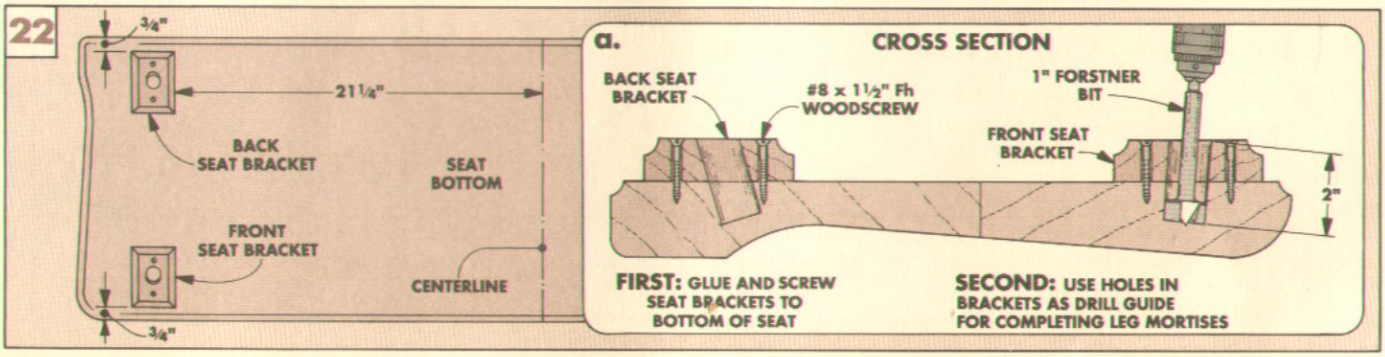

LEGS & STRETCHERS

To make the legs for a bench, the Shakers would have used a lathe. But I wanted all the legs to be identical, so I shaped them from dowels using a shop-made jig, see the article beginning on page 18. Shop Note: On the legs, I also cut flutes on the ends of the tenons, see Fig. 23. To do this, refer to page 14.

STRETCHERS. After the **legs (C)** have been shaped, they can be dry-assembled into the seat, see Fig. 23. This is to test the fit of the tenons, and also to measure for the **stretchers (D)**. The stretchers are cut from a 5/8"-dia. dowel rod, see Fig. 24.

I used the router table with a core box bit to rout a round tenon on the ends of each stretcher, see Fig. 24a. (This is similar to the procedure shown for the table saw on p. 19.)

CUT OFF BOTTOMS. Before assembling the stretchers and legs, I cut the bottom off each leg so the bench would sit flat on the floor. To do this, place the bench on a large, flat surface. (I used a door on the floor.)

Next, scribe around the bottom of each leg to indicate where the legs should be trimmed, see Fig. 25. Then remove the legs and trim off the ends. (I labeled the legs so they wouldn't get mixed up later).

ASSEMBLE LEGS & STRETCHER. Before the legs can be attached to the seat, a mortise must be drilled in each leg to accept the stretcher, see box below.

After the mortises are drilled, the stretchers can be glued into the legs, and the legs glued into the seat, see Fig. 26.

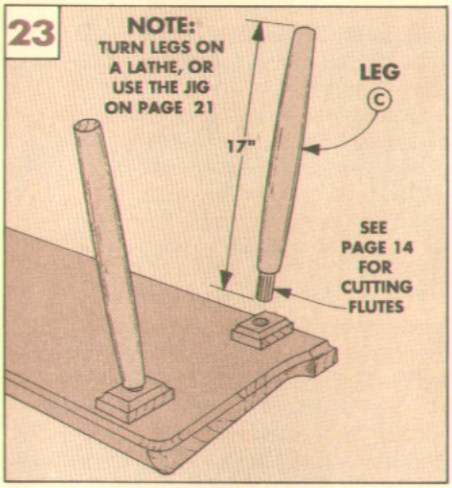

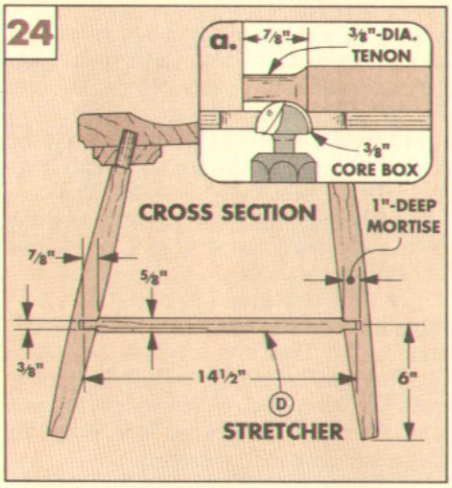

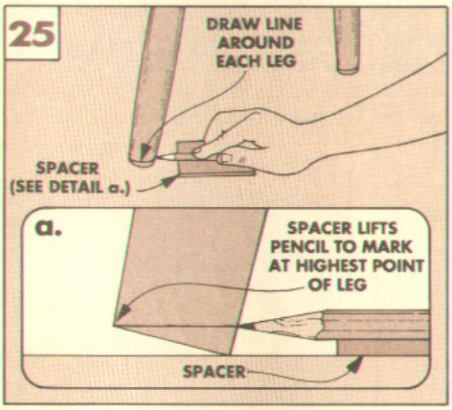

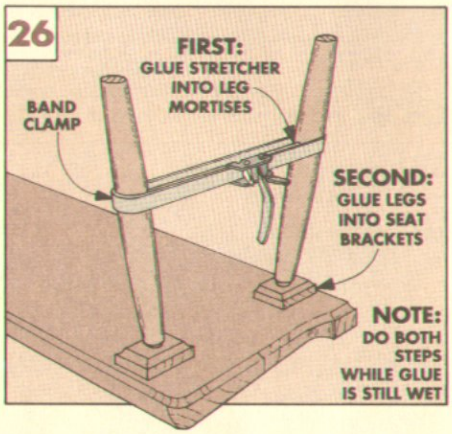

DRILLING INTO ANGLED LEGS

Drilling a mortise in opposite legs for a connecting stretcher can be a problem. First, the mortises must be drilled the same distance from the floor, and they should be directly across from each other.

DRILL GUIDE. The system I came up with uses a pair of runners that rest on the floor between the front and back legs, see Fig. 4. When the drill is held between the legs, the bit is "aimed" by a guide block. The result is a mortise in the correct location on each leg.

I started by cutting the runners to fit across the legs, but short of the desired (6") height of the mortises, see Fig. 1. Then I clamped the runners around the legs.

Next, cut a guide block to ride between the runners on a pair of "wings," see Fig. 2. Finally, drill a hole through the guide block the same diameter as the tenon on the stretcher. Then mark the bit when it reaches the desired depth of the mortise, see Fig. 3.

DRILL MORTISES. To drill the mortises for the stretchers, first insert the drill bit through the hole in the guide block, then fit the block between the runners.

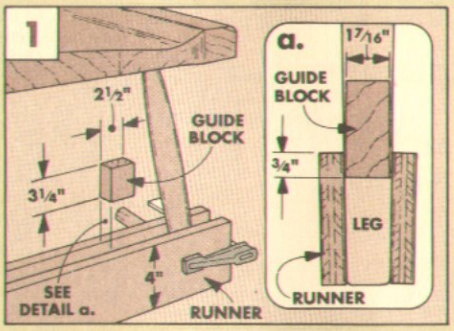

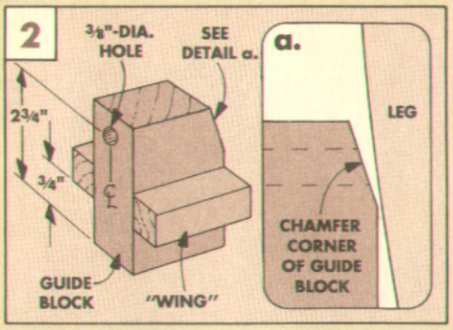

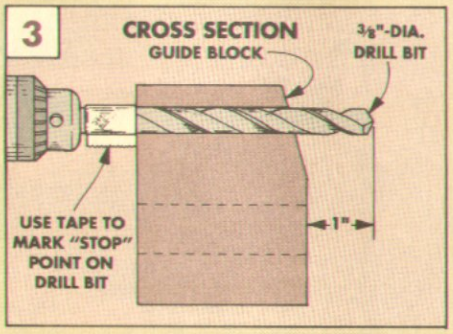

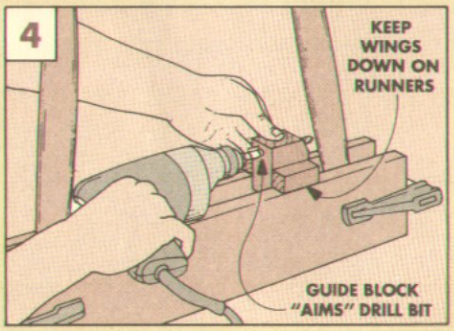

BACK REST

After the legs and stretchers are attached to the seat, I started work on the back of the bench. This consists of a back rest connected to the bench with tapered spindles.

CUT BACK REST. The back rest tops off the Shaker Bench and secures the tops of the back spindles.

First, cut the **back rest (E)** to finished width and length from a piece of ¾"-thick stock, see Fig. 27.

Then, to "blend" the back rest in with the seat of the Bench, I trimmed an angle off each end, see Fig. 27a.

Next, sand a radius on all four corners. (I used a drum sander in the drill press.)

MORTISES. Now lay out a series of mortises on the back rest to accept the spindles. To do this, I used the same template I had used earlier to lay out the holes along the back of the seat. First, align the centerline on the template with a centerline drawn on the back rest, see Fig. 27.

Then transfer the marks for the locations of the mortises from the template to the bottom edge of the workpiece.

Now the mortises can be bored in the back rest, centered on the thickness of the workpiece, see Figure 28.

Shop Note: A guide fence attached to the drill press helps hold the workpiece upright while drilling.

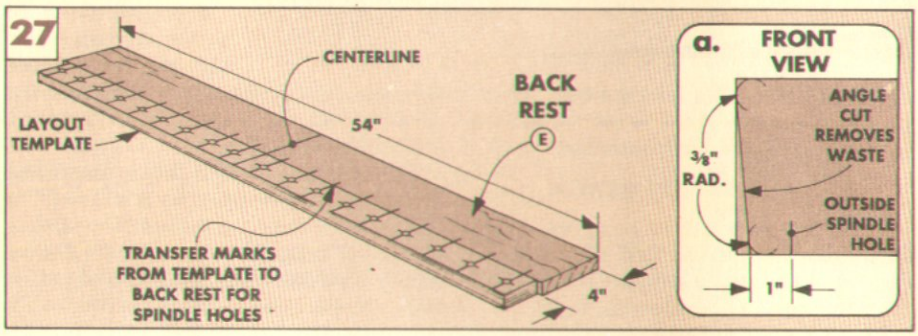

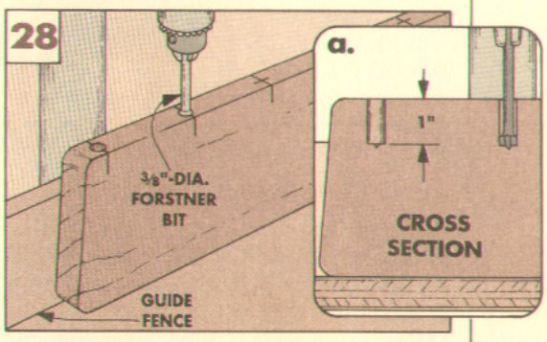

SPINDLES & FINAL ASSEMBLY

The back spindles start out as extra-long pieces of ⅝"-dia. dowel rod. For a more graceful look, the dowels are tapered from the bottom (thick) end to a thinner top (⅜"-dia.) end, see Fig. 29. (See page 18 for this.)

After the dowels have been tapered, cut the **spindles (F)** to finished length by cutting off both ends, see Fig. 29.

Shop Note: It's easier to insert the spindles into the seat (A) if the bottom (thick) ends are lightly chamfered, see Fig. 29a.

RE-USE TEMPLATE. There's one last use for the layout template. First, enlarge each hole in the template to ⅝"-dia. Then rip the template in half, see Fig. 30. Now the template can help align the spindles, see Fig. 32.

INSTALL SPINDLES. To install the spindles, first glue them into the holes in the back rest, see Fig. 31. Then, glue them into the holes in the seat. Note: Because the spindles aren't tapered at the bottom ends, they can be "bottomed out" in the holes.

FINISH. To see how I finished the bench, refer to the article on the following page.

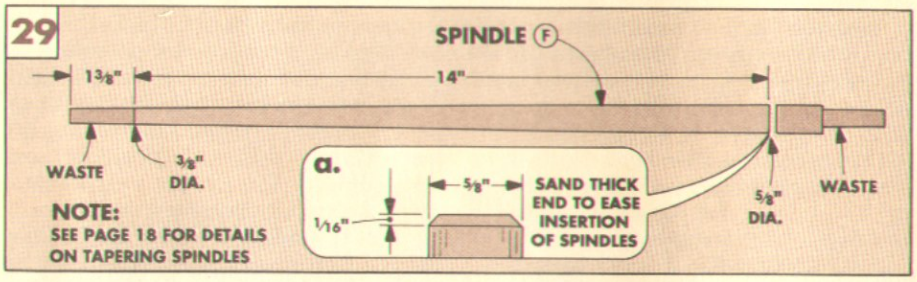

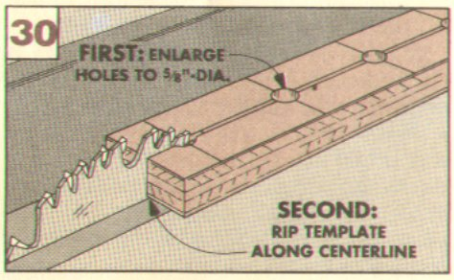

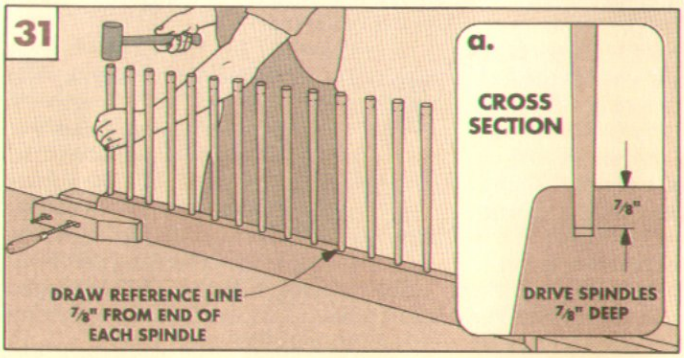

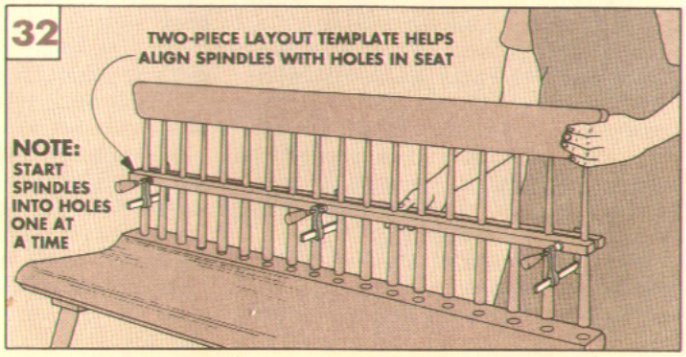

Finishing the Bench

When the Shakers built a piece of furniture out of different woods, they usually stained it or painted it with milk paint. The goal was simple. Make the woods look the same so the piece wouldn't draw attention to itself.

With this Shaker Bench, I decided to use a stain too. But I wanted to *highlight* the differences between the darker cherry and the lighter maple — not hide them.

STAINING CHERRY

I don't usually stain cherry. It may be a pale pink or salmon when you're working with it. But as cherry is exposed to light, the wood darkens naturally to a rich reddish-brown. (This takes anywhere from 6 to 12 months depending on how much sunlight it gets.)

With the Shaker Bench, I wanted to speed up the aging process so the contrast between the two woods could be seen right away. And staining also evens out any differences in the cherry between the lighter sapwood and the darker heartwood.

STAIN PROBLEMS. One problem with staining cherry is that there aren't many stains available that look like naturally-aged cherry. They're either too red or too dark.

Another problem with staining cherry is that it can end up with dark blotches. But the problem really isn't the stain. It's the grain.

The grain in cherry can be wavy. As the wavy grain turns up towards the surface of the board, it becomes end grain. This can result in a beautiful, highly-figured workpiece. But when stained, this figured grain often looks like blotches. That's because end grain soaks up stain like a sponge — becoming darker than the wood around it.

GEL STAINS. So how do you solve these problems? Gel stains are one solution. They're thicker than other stains (about the consistency of pudding). This means the end grain can't soak it up as quickly. The stain doesn't penetrate the wood as deeply, but it penetrates more evenly. The result is a consistent color and less blotching.

ACRYLIC WOOD STAIN. After testing several gel stains, I found one I liked: Liquitex Acrylic Wood Stain (see next page). It's a transparent stain that's water-based and non-toxic. This stain had the best "aged" cherry color of any stain I've seen. And it left the grain both clear and consistent.

STAINING THE BENCH

I stained the seat and the back rest *before* assembling the Shaker Bench. That way I didn't have to tape the spindles or worry that the stain would bleed under the tape.

PRECAUTIONS. I took a couple of precautions before staining. One was to sand all the parts up to 320-grit sandpaper. This helps the cherry to accept the stain evenly across the face and the end grain.

Cherry stains don't usually look like naturally-aged cherry. But I found a gel stain that does.

I also took another simple precaution. (I tend to be very careful when it comes to finishing a project.) I plugged the holes in the seat, see photo above. I did this to keep the stain from seeping in and preventing the glue from bonding when I glued in the spindles. (But since the stain is thick and dries quickly, I doubt that you'd have any problems if you left the plugs out.)

RAISING THE GRAIN. Using a water-based stain also requires another step before you begin — you have to raise the grain.

When wood gets wet, the loose fibers stand up like whiskers. So you have to "pre-wet" the project, and then lightly sand off the whiskers before using a *water-based* stain.

I wiped both the seat and rail with a damp rag. Then after the wood had dried, I lightly sanded the surface again with 320-grit paper. Don't sand too much, or you'll expose new fibers and have the same problem again.

APPLYING THE STAIN. At this point, the cherry is ready to be stained. I found the Liquitex stain dries very quickly, and lap marks can be a problem. So to extend the drying time, I lightly misted the wood with a spray bottle of water before applying the stain. Then I squirted on the Liquitex stain and wiped it in with a cloth, see photo.

I worked one large section at a time, starting with the concave section on top. From there I stained the flat section (with the holes). Then the edges, and finally, the bottom.

The best time to even out lap marks and light areas is while the stain is still wet. For this, I use the same rag as I used for staining, but lightly dampened with additional stain. And to avoid swirl marks, I always wiped the stain with the grain — not in circles.

TOP COAT

A stain doesn't protect the wood. It only changes the color. So after the Shaker Bench was assembled, I applied a top coat.

Note: Whenever you use a water-based stain, be sure to give the stain time to dry *completely* before applying a top coat.

ARM-R-SEAL. I use oil/urethane finishes a lot. They're simply wiped on, and the excess wiped off. For the Shaker Bench, I wanted to use General Finishes' Arm-R-Seal because it has a higher percentage of urethane and hardens to a protective shell.

APPLYING THE TOP COAT. It's best to apply an oil finish in several thin coats. Again I worked in large sections, but this time I used a foam brush. (You can use a rag.) Then I wiped it off with a clean rag almost immediately, always wiping with the grain. To allow both sides of the seat to expand and contract evenly with changes in humidity, finish the bottom of the seat too.

Note: If you find the oil is sticky when you wipe it off, it has already started drying. Simply add more oil and wipe it off immediately.

When the first coat of Arm-R-Seal had dried overnight, I applied a second coat. After it was dry, I lightly sanded the surface with 400-grit sandpaper (to smooth out the bumps) and followed up with one more coat.

Once that dried, I felt that the Bench had enough protection, but was a little glossier than I wanted. So I lightly rubbed out some of the gloss with 0000 steel wool.

Sources

PORTABLE WORKBENCH

A hardware kit with all of the parts to build the Portable Workbench (shown on page 6) is available from *Woodsmith Project Supplies*.

Note: You will need to cut the dowels, hinges, and threaded rod in the kit to fit. The wood and plywood needed to build the workbench are not included in the kit.

- (4) Piano Hinges, 1½" x 18", Brass Plated with Screws
- (4) Magnetic Cylinder Catches with Strikes and Screws
- (6) Draw Catches, Brass Plated with Screws
- (1) 1"-Dia. Dowel, 36" Long (For Bench Dogs and Cross Dowels)
- (2) ½"-Dia. Dowels, 3" Long (For Handwheel Handles)
- (1) ⅜" Threaded Steel Rod, 36" Long
- (2) ⅜" Cap Nuts, Brass
- (2) ⅜" Flat Washers
- (2) ⅜" Lock Nuts
- (6) Nylon Spacers, ⅜" Inside Dia., 1" Outside Diameter
- (2) ⅜" Threaded Inserts, Steel
- (2) 6d Common Nails
- (8) #8 x ¾" Fh Woodscrews
- (16) #8 x 1" Fh Woodscrews
- (26) #8 x 1¼" Fh Woodscrews
- (14) #8 x 2" Fh Woodscrews

W88-788-100 Portable Workbench Hardware Kit.....$29.95

SHAKER BENCH

There isn't any special hardware needed for the Shaker Bench shown on page 22. Sometimes, though, it can be difficult to find large diameter dowels in different woods. (I used maple for the Shaker Bench and red oak for the Three-Leg Stool on page 16.)

There's a technique shown on page 14 for making your own dowels on the router table with square stock. But if you would prefer to purchase dowels in a variety of woods, they're available from the "Mail Order Sources" listed below.

BAND SAW BLADES

A number of band saw blades are mentioned on page 13. Listed below are some catalog sources for band saw blades.

To find a local dealer of Lenox band saw blades call American Saw at 800–628–3030. For Olson blades call 203–792–8622. For Wood Slicer blades call Highland Hardware at 800–241–6748.

The Cool Blocks and band saw blade tuning stone mentioned in the article are available from the sources listed below.

For more information about band saw blades and tuning up a band saw, I would recommend *The Band Saw Handbook* by Mark Duginske. It's available from the catalogs listed below.

FINISHES

On page 30 there's an explanation about how I finished the Shaker Bench. The key thing was finding a stain that would be close in color to "aged" cherry. I found a product at an art supply store that does as good a job as any I've seen. It's called Liquitex Wood Stain. This is a water-based gel stain. One 4 oz. bottle was enough to stain the seat and back rest of the Bench.

Woodsmith Project Supplies is offering the Liquitex Wood Stain (Cherry only).

W88-4003-060 Liquitex Cherry Stain .....$4.79 per 4 oz.

After the stain dried on the Shaker Bench, I applied two coats of General Finishes' Arm-R-Seal satin top coat to the whole bench (both the maple and the cherry). It's a durable oil and urethane finish.

W88-4003-620 Arm-R-Seal Oil and Urethane Top Coat (Satin) .....$9.95 quart

ROUTER BITS

A variety of router bits are needed to build the projects in this issue.

All of the necessary bits can be ordered from *Woodsmith Project Supplies*. (Note: Order the shank size to fit your specific router.)

These bits are all high-quality and carbide-tipped bits. They're the same bits used in the *Woodsmith* shop.

W88-1514-811 ⅛" Round-Over Bit (¼" shank) $23.95
W88-1512-821 ⅛" Round-Over Bit (½" shank) $26.95
W88-1514-817 ⅜" Round-Over Bit (¼" shank) $24.95
W88-1512-826 ⅜" Round-Over Bit (½" shank) $25.95
W88-1512-835 ¾" Round-Over Bit (½" shank) $44.95
W88-1514-126 ⅜" Cove Bit (¼" shank) $29.95
W88-1514-721 ½" Core Box Bit (¼" shank) $21.95
W88-1512-730 ½" Core Box Bit (½" shank) $25.95
W88-1514-885 Flush Trim Bit (¼" shank) $15.95
W88-1512-887 Flush Trim Bit (½" shank) $17.95
W88-1514-170 Chamfer Bit (¼" shank) $21.95
W88-1512-175 Chamfer Bit (½" shank) $23.95
W88-1514-381 V-Groove Bit (¼" shank) $23.95

ORDER INFORMATION

BY MAIL

To order by mail, use the order form that comes with the current issue. The order form includes information on handling and shipping charges, and sales tax.

If the mail order form is not available, please call the toll free number at the right for more information on specific charges and any applicable sales tax.

BY PHONE

For fastest service use our Toll Free order line. Open Monday through Friday, 7:00 AM to 7:00 PM Central Time.

Before calling, please have your VISA, MasterCard, or Discover Card ready.

1-800-444-7527

Note: Prices subject to change after October, 1993.

MAIL ORDER SOURCES

Similar hardware and supplies may be found in the following catalogs. Please call each company for a catalog or information.

Constantine's
800–223–8087
Workbench Hardware, Dowels (⅝", 1"), Router Bits, Band Saw Handbook

Cherry Tree Toys, Inc.
800–848–4363
Dowels (⅝", 1", 1½"), Band Saw Blades

Highland Hardware
800–241–6748
Wood Slicer Band Saw Blades, Cool Blocks, Tuning Stone, Band Saw Handbook, Router Bits

Garrett Wade
800–221–2942
Band Saw Blades, Cool Blocks, Tuning Stone, Band Saw Handbook, Router Bits

Trendlines
800–767–9999
Dowels (⅝", 1", 1½"), Band Saw Blades, Cool Blocks, Band Saw Handbook, Router Bits

Woodcraft
800–225–1153
Workbench Hardware, Band Saw Blades, Cool Blocks, Tuning Stone, Band Saw Handbook, Router Bits

Woodworker's Supply
800–645–9292
Workbench Hardware, Dowels (1", 1½"), Band Saw Blades, Band Saw Handbook, Router Bits

The Woodworkers' Store
612–428–3200
Workbench Hardware, Dowels (⅝", 1"), Band Saw Blades, Band Saw Handbook, Router Bits, General Finishes

Final Details

Shaker Bench

▲ *To the Shakers, this was a project for hand tools and a lathe. But it can be built to look the same with a table saw and router. It's all in the technique. The table saw is used in place of hand tools for shaping the contoured seat. And the tapered legs and spindles are "turned" with a router jig.*

Three-Leg Stool

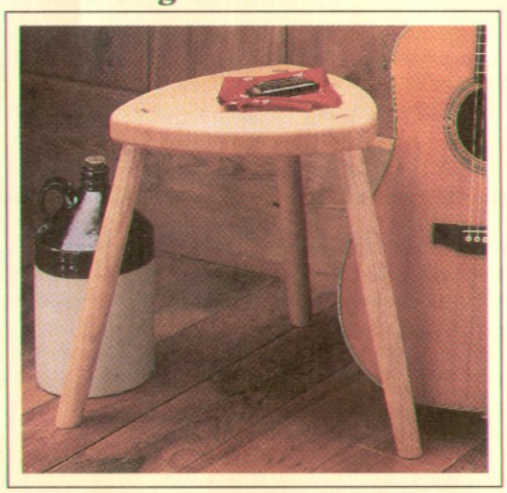

▲ *For stability, the legs of this Stool are installed at an angle. And for strength without hardware, they're joined to the seat with wedged tenons.*

Portable Workbench

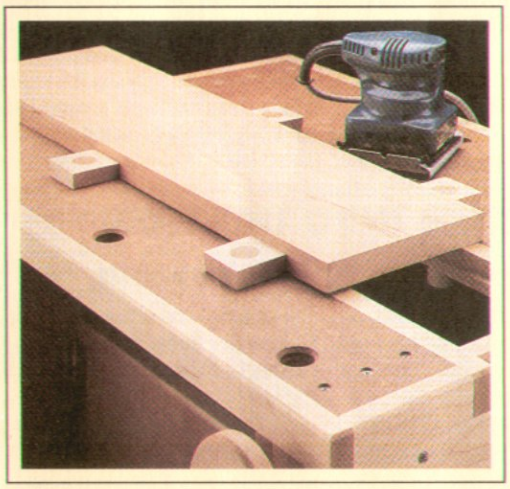

▲ *The top of this Portable Workbench is also a vise. The jaws can clamp a narrow workpiece on edge, or a wider piece lying flat between "dogs."*